ISSN 1067-490X
Volume 15, Number 3, Fall 2007

IEEE

Broadcast Technology Society Newsletter

The technologies to deliver information and entertainment to audiences worldwide, at home and on the go.

From the President

Greetings BTS membership. I'd like to talk about a couple of items that I believe will have some long lasting impact on the Broadcast Technology Society. Since first becoming involved with BTS I have voiced the opinion that for our society to grow and flourish we need to focus on serving the membership and becoming more relevant to them in our day to day lives. In July of this year I attended an IEEE technical activities strategic planning committee in Vancouver, British Columbia. It was somewhat comforting to find out that many of the societies that were represented at that meeting were of the same opinion.

Based on the discussions that I participated in, it appears that the IEEE in general is having a bit of an identity crisis. Much of the discussion regarding technical and society activities pointed to an overall focus on meeting the needs of academia with insufficient focus on the needs and growth of engineers working in this industry. What is needed is a strategy that meets the "working" engineer without diminishing the service to the academic communities that we already serve. In the near future we'll be hearing about some proposed initiatives that are designed to move overall technical activities in that direction. There is however no reason that BTS cannot begin to reach out to industry immediately.

In the last news letter I spent some time talking about the educational committee and the initiatives they are working on that are focused on working engineers specifically. The committee is being lead by Ralph Hogan and has been actively involved in a pilot

continued on page 2

From the Editor

I have just returned from the IBC in Amsterdam (my first IBC) and that's my excuse (and I'm sticking to it) for delaying the publication of the newsletter. It was a great experience being at IBC and also that we had so many of our members there. I believe we had 12 at our AdCom meeting held at the beginning of the conference and I saw some additional members in the following days. I expect there were also some I missed in the crowd of 46,964.

I did not know exactly what to expect although I thought the IBC would be the European version of NAB and in some respects it is. The trade show is much like NAB with many of the same vendors but in some cases with products more directed more to the European and international markets. The "feel" of the IBC is however different than NAB or at least that was my perception and the technical conference is markedly different. I think much of this has to do with the fact that the IBC partners represent a much different group than the NAB.

The NAB is the sole owner of its show and conference and the membership of NAB is primarily broadcasters

continued on page 2

Inside

IEEE

From the Editor continued

from the United States and its main function is to represent the interests of that membership and lobby on their behalf. Whereas, the ownership of IBC is divided among partners and those partners have a different mission than the NAB. Five of the six IBC partners are professional organizations: The Institution of Engineering and Technology (IET), IEEE Broadcast Technology Society (IEEE-BTS), The Royal Television Society (RTS), The Society of Cable Telecommunication Engineers (SCTE) and The Society of Motion Picture and Television Engineers (SMPTE). The sixth partner is The International Association of Broadcasting Manufacturers that as its name implies represents the interest of the manufacturing community.

Although I cannot actually describe the difference in the "feel' between IBC and NAB, I believe it reflects the different mission of the owners and the difference between an industry lobbing organization and the professional engineering organizations that make up 83% of the IBC partners.

The technical presentations also reflect this difference in that they tend to be more tutorial in nature. As a result the presentations tend to be directed to a broader audience and are therefore more informative to the individual who may be learning about a subject that is outside of his or her area of expertise. This is not intended to say that one conference is better than the other but just different. I have been a frequent presenter at NAB and enjoy the NAB Broadcast Engineering Conference but find the papers that are outside my area of expertise are often difficult to comprehend. On the other hand, at IBC I attended several sessions on subjects of which I have little knowledge but was able to come away with some basic understanding. I believe it reflects the fact that the sponsoring organizations realize that their members will get the more detailed lower level presentations from attending events within their area of interest and come to IBC to broaden their understanding of other areas.

So why have I spent so much time talking about IBC. It is because I want our membership to have a better understanding of what IBC is in that the overwhelming portion of the BTS budget comes from this one event. If you ever have the opportunity to attend, I highly recommend it. By the way, visiting Amsterdam is not bad either.

By the time you receive this, the 57th Annual IEEE BTS Broadcast Symposium will be upon us. The symposium committee has put together another great program for the three days beginning on October 31, 2007. And as I noted last time it will be held once again at our old home the Hotel Washington in Washington, DC. This almost certainly will be the last time to attend at the Hotel Washington since the hotel has been sold and the new owners are reported to be planning a major renovation that will also mean a huge increase in cost to use the hotel that will make it economically infeasible to hold future symposiums there so take this opportunity to say Goodbye to our old friend.

Once again, thanks to Ted Kuligowski and our contributors we have another informative issue so please keep the content coming. Hope to see all of you at the Symposium.

Bill Meintel
wmeintel@computer.org

Newsletter Deadlines

The BTS Newsletter welcomes contributions from every member. Please forward materials you would like included to the editor at wmeintel@computer.org. Here are our deadlines for upcoming issues:

Issue	Due Date
Winter, 2007	October 20, 2007
Spring, 2008	January 20, 2008
Summer, 2008	April 20, 2008
Fall, 2008	July 20, 2008

From the President continued

project with Turner Broadcasting on identifying and developing training needed by their engineers. Key areas that are being focused on are what broadcast engineers need to know about information technology engineering and vice versa as well as engineers transitioning to engineering management. This indicates that the broadcast industry is looking for partners to educate their workforce in practical applications of technology and since "the advancement of the theory and practice of electrical and electronic engineering…" is a foundational objective of BTS, clearly it fits our mission. I know Ralph and his team is working diligently on this project and they would welcome contributions from other BTS members in this and other projects.

Another role that BTS plays in the industry is the creation of standards. Along those lines, I am pleased to announce that Warner W. Johnston has agreed to chair the BTS Audio/Video standards committee. Warner is a long time IEEE member and is currently the Manager of Television Network Transmission for ABC in New York where he has worked since 1974. He brings to the committee a wealth of experience in standards work. He currently represents ABC and chairs several committees on the Consumer Electronics Association Standards Development Organization (ANSI) for the development of standards

continued on page 3

IEEE Broadcast Technology Society Newsletter (ISSN 1067-490X) is published quarterly by the Broadcast Technology Society of the Institute of Electrical and Electronics Engineers, Inc. Headquarters address: 345 East 47th Street, New York, NY 10017-2394. Sent at a cost of $1.00 per year to each member of the Broadcast Technology Society. Printed in USA. Periodicals postage paid at New York, NY and at additional mailing offices. Postmaster: Send address changes to: IEEE Broadcast Technology Society Newsletter, IEEE, 445 Hoes Lane, Piscataway, NJ 08855.

in the Consumer Electronics areas. Warner also chairs the New York BTS chapter. The BTS A/V standards have been dormant for some time and I am looking forward to Warner revitalizing this area. Like education, the creation of standards is another core objective for BTS.

By recognizing these two valuable members of BTS, it is not my intention to slight or diminish any of the other dedicated volunteers that are working to revitalize BTS. There are many more involved and a visit to the BTS website's (http://www.ieee.org/organizations/society/bt/index.html) AdCom page lists their names and their areas of responsibility. Unfortunately, the list is too short and the names change too infrequently. Most of these people have been involved for many years and although they do not begrudge the commitment they have made, they would all certainly welcome feedback and assistance from other less engaged BTS members. Those of us who volunteer in this and other organizations have realized something that many others need to know. By contributing our time and effort, we increase the benefits to ourselves and others and that more than anything else is what will insure continued growth and increasing benefits to the members.

Bill Hayes
Hayes@iptv.org

IEEE 57th ANNUAL BROADCAST SYMPOSIUM

Wednesday 31 October through Friday 2 November 2007
Hotel Washington
Washington, DC

The 57th Annual Broadcast Symposium offers an exciting program, with cutting-edge presentations by leading professionals in the broadcast engineering field. On Wednesday, the program opens with a Tutorial on using Broadcast DTV Signals for Mobile Applications. Thursday's sessions address Broadcast Digital Television Transmission. Friday morning's session is Broadcast Digital Radio Transmission; the afternoon session is Digital Cable and IPTV Applications. The program also includes a top-level luncheon speaker each day.

In addition, the Symposium serves as an opportunity for you to network, meet with old friends and make new friends. Plan to attend the Welcome Reception on Wednesday evening.

For details and on-line registration, please visit the Symposium website at:

www.ieee.org/bts

Preliminary Technical Program

Subject to change

Wednesday, 31 October

Using Broadcast DTV Signals for Mobile Applications - Part 1

Session Chair – James Fang, Consultant

Applications of ATSC for the Mobile User
Tim Talty, General Motors, USA

Partitioned H.264/AVC Video Transport over Special OFDM Channel
Abbadi Rachid, Ecole Mohammadia des Ingenieurs, Morocco

Cyclic Delay Diversity - A Simple Transmit Diversity Technique for Broadcast Systems
Simon Plass, German Aerospace Center (DLR), Germany

Design and Implementation of Digital Echo Cancellation On-Channel Repeater in DVB-T/H Networks
Yue Zhang, Brunel University, United Kingdom

Evaluation of Performance Characteristics of a DVB H Network for Different Reception Conditions
David Plets, Ghent University/IBBT, Belgium

Calculation of required number of base stations for indoor reception of DVB-H in Flanders
Wout Joseph, Ghent University/IBBT, Belgium

Box Lunch

Using Broadcast DTV Signals for Mobile Applications - Part 2

Session Chair – Charles Einolf, Consultant

Dual-antenna Based Technique to Mitigate Doppler Spread in Mobile Digital Reception
Abdelmoumen Mouaki-Benani, Communications Research Center, Canada

Improved RF Performance of Multi User Sites by Using Optimally Spaced Antenna Systems
George Harris P.E., RF Technologies LLC, USA

Broadcaster "In-Band" Mobile/Handheld Planning Realities
Mark Aitken, Sinclair Broadcast Group, USA

A System for Mobile Applications within ATSC Broadcasts
Wayne Bretl, Harris Corp/Zenith Electronics, USA

Advanced VSB - A Physical Layer Proposal for ATSC-M/H
Jungpil Yu, Samsung, Rohde & Swartz, China

Integrating Datacasting Systems with the Web: A Software MiddleLayer for Web Applications Developers
Nick V. Flor, University of New Mexico, USA

Evening Welcome Reception

Thursday, 1 November

Broadcast Digital Television Transmission - Part 1

Session Chair: Jon Edwards - duTreil, Lundin & Rackley, Inc.

Outlines of the Brazilian Digital Terrestrial Television Broadcasting System - ISDTV
Gunnar Bedicks, Mackenzie Presbyterian University, Brazil

A Digital Rights Management System Pro-

posal for the Brazilian DTV
Laisa Caroline de Paula Costa, Sao Paulo University, Brazil
Analysis of DTV Transmitter Identification Signal using Partial Correlation Method
Sung Ik Park, ETRI, Korea
Field Testing Distributed Transmission Systems
S. Merrill Weiss, Merrill Weiss Group LLC, USA
Distributed Transmission System Field Trial and Test Results
John Figura, Richland Towers, USA

Joint BTS/AFCCE Luncheon

Broadcasting in Iraq
Fred Matos, National Telecommunications and Information Administration

Broadcast Digital Television Transmission - Part 2
Session Chair: Gary Cavell - Cavell, Mertz & Davis

IEEE 802.22 – A Developing Standard for Wireless Regional Area Networks Providing Fixed, Point-Multipoint Broadband Access
Carl R. Stevenson, WK3C Wireless LLC, USA
Non-Real-Time Services
Rich Chernock, Triveni Digital, USA
Low Complexity Implementation of Channel Estimation and Equalization for Chinese DTTB system
Wang Dan, Tsinghua University, China
Analysis of the DVB-T Signal Time Variation for Indoor Portable Reception
Alain Martinez, University of The Basque Country, Spain
Performance of the Consumer Grade ATSC-DTV Receivers in the Presence of Single or Multiple Interferences on Adjacent/Taboo Channels
Khalil Salehian, Communications Research Center, Canada

Friday, 2 November

Broadcast Digital Radio Transmission
Session Chair – Bob Surrett - Shively Labs

A Novel Field Test and Data Analyze Method for Estimating and Verifying DAB Signal Coverage
Gao Peng, Radio Institute,Academy of Broadcasting Science of SARFT, China
Analysis of the ITU-R P.1546-2 Prediction Method Accuracy for DRM Local Coverage Using the 26 MHz Band
Iván Peña, University of the Basque Country, Spain
Accurate Evaluation of Magnetic and Electric Field Losses in Ground Systems
Valentino Trainotti, University of Buenos Aires, Argentina
The Methodology for Collecting FM and IBOC Signal Data
John Kean, NPR, USA
Perceptual Tests of Low Bit Rate and Very Low Bit Rate Coders
Ellyn G. Sheffield, NPR, USA

IEEE/BTS Awards Luncheon

Keynote Speaker - Don Lockett, NPR
Digital Cable and IPTV Applications
Session Chair: Paul Hearty

Downstream Channel Bonding for HFC Networks
Mary Looney, Cork Institute of Technology, Ireland
Triple Play Transmission Characteristics over pDSL
Lamartine Souza, Federal University of Pará (UFPA), Brazil
IMS-based IPTV Multicast Service Delivery over Satellite Network
Toufik Ahmed, University of Bordeaux, France
Treatment of Broadcast Signals over Cable
TBD

Warner W. Johnston assumes Chair of the BTS Audio/Video techniques Standards Committee

President Bill Hayes is pleased to announce that Warner W. Johnston assumes the duties of Chair of the BTS Audio/Video Techniques Standards Committee.

The IEEE is a leading developer of standards (http://standards.ieee. org) that underpin many of today's technologies. Our standards are developed in a unique environment that builds consensus in an open process based on input from all interested parties. With nearly 1,300 standards either completed or under development, we are a central source of standardization in both traditional and emerging fields, particularly telecommunications, information technology and power generation.

Warner W. Johnston brings to his new position a broad range of professional knowledge and experience in the broadcast engineering profession. Currently Warner represents ABC Television at the Consumer Electronics Association (CEA) Standards Development Organization (SDO) (ANSI) for the development of standards in the Consumer Electronics Areas. He chaired several working groups within the CEA SDO including those on Component analog Television Interfaces, Regional Rating Tables, Document Maintenance and both Analog and Digital Closed Captioning. In 2005 ABC, CEA won a technical Emmy for Standardization of Closed Captioning which was shared with ABC and PBS. Warner chaired one of the two groups that won the Emmy.

Warner has been an IEEE member since 1973. He became a senior member in 2003. He is a member of the IEEE Broadcast Technology Society, the Communications Society, the Consumer Electronics Society, the Test and Measurement Society and the IEEE Standards Association.

His professional background includes duties with the U.S. Army Signal Corps, RKO General (WGMS –

Warner W. Johnston, sharing in the group receiving Emmy for Standardization of Closed Captioning

Washington, DC, WSLO – NYC, and WAXY – Ft. Lauderdale, FL) and Automatic Electric Laboratories. Since 1974 to the present time, Warner has been with ABC Television where he now serves as Manager of Television Network Transmission.

Warner has served in many capacities with the IEEE including Vice Chair of the New York IEEE Section, Vice Chair of the Tappan Zee Subsection, and Chair of the New York BTS Chapter, past AdCom member for the Consumer Electronics Society.

As Chair of the BTS Audio/Video Techniques Standards Committee, his first initiative is to locate and bring up to date in terms of formatting, photographs, and the old, but still valuable IEEE standards and reaffirm them. There may be, and almost certainly are others but this group includes IEEE 201, 206, 511, 764 and 847. Warner also intends to check and make suggestions to some definitions in The IEEE Dictionary, or as it is commonly known, IEEE 100, *The Authoritative Dictionary of IEEE Standards Terms*, Seventh Edition. IEEE 100 is a product of the IEEE Standards Information Network (SIN). IEEE 100 provides definitions for over 35 000 technical terms from every field of electrical, electronics, and computer engineering used throughout industry today. IEEE 100 also includes abstracts of IEEE standards.

Warner recognizes that the voting body must be determined by the procedures of The Standards Association of IEEE, but the work is open to any interested person. He proposes to do all work via e-mail, teleconference and the Internet. Since television is being relayed via the Internet in the form of IPTV, there is no reason not to use the medium to measure it. Warner believes that through the standards work, the BTS needs to show how to measure. He offers this quote below:

"I often say that when you can measure what you are speaking about, And can express it in numbers, you can know something about it; but when you can not measure it, when you cannot express it in Numbers, your knowledge is of a meager and unsatisfactory kind..." Lord Kelvin

You are cordially invited to participate and join Warner W. Johnston's IEEE BTS Audio/Video Techniques Standards Committee. You will find the work interesting and rewarding as well as providing a valuable service to the broadcast engineering profession. For information or questions, please contact Warner at:

Warner W. Johnston
ABC-TV
Vox: 1 212 456 2547
Fax: 1 212 456 4472

"Everything is relative but there is a standard which may not be deviated from…." A. Escoffier

The IEEE Transactions on Broadcasting 2006 Professional Ranking Continues improving as Reported by the 2006 Journal Citation Reports

The IEEE Broadcast Technology Society is very pleased to report that the IEEE Transactions on Broadcasting has demonstrated continued improvement in three key areas of quantifiable evaluation measurements of its publication in comparison to the world's leading journals and its impact and influence in the global research community. This data was collected and reported by the Thomson Corporation which is the recognized authority for evaluating professional journals.

Based on 2006 Journal Citation Reports (JCR), published in June 2007, by the Thomson Corporation, the BTS Transactions on Broadcasting Impact Factor (a value measuring the quality of the journal) is 1.235 for the year 2006, a small improvement over 2005. Generally speaking, a journal with an Impact Factor larger than 1 is considered to be a good quality journal.

The Impact Factor for the IEEE Transactions on Broadcasting has been consistently improving over the years as shown by the data below:

IEEE Transactions on Broadcasting Journal Impact factor

Year	2006	2005	2004	2003
Impact Factor	1.235	1.213	0.702	0.423

Another measure is the ranking of the IEEE Transactions on Broadcasting

among all Electrical and Electronics Engineering Journals. In 2006, there were 206 EE journals published worldwide. The IEEE Transactions on Broadcasting ranked No. 54 (top 26%). The previous years EE ranking showed a consistent improvement as reported below:

Ranking of IEEE Transactions on Broadcasting in Electrical and Electronics Engineering Journals

Year	2006	2005	2004	2003
Ranking	54	61	92	139

The last measurement is the ranking of the IEEE Transactions on Broadcasting among all Telecommunication Journals. In 2006, there were 59 Telecommunication journals in the world. The IEEE Transactions on Broadcasting ranked No. 11 (top 18.6%).

Ranking in Telecommunication Journals

Year	2006	2005	2004	2003
Ranking	11	14	20	33

The IEEE Transactions on Broadcasting is doing very well. This BTS publication ranked higher than several other highly respected journals such as the IEEE Transactions on Communications, the IEEE Transactions on Wireless Communications, the IEEE Transactions on Vehicular Technologies, the IEEE Spectrum, etc.

The IEEE Broadcast Technology Society extends its heartiest congratulations and thanks for all the hard work, time, dedication and solid support given to this publication by an outstanding BTS team of volunteers lead by our Editor-in-Chief, Dr. Yiyan Wu and supported by a group of expert Associate Editors, numerous referees worldwide, the BTS Publications Coordinator, Linda Bernstein and BTS Administrator Kathy Colabaugh. The IEEE Broadcast Technology Society is proud of the IEEE Transactions on Broadcasting and its high professional recognition within the global research community.

BTS Web Site Provides Membership Directory

The BTS home page web site (www.ieee.org/bts) now provides a new on-line membership directory of all BTS members. BTS members can access this directory by going to the BTS home page and clicking on "Membership Directory" listed on the bottom left side of the home page. You will be taken to the page "BTS Member Roster Search/Browse Tips". This page provides guidelines how to conduct a search for specific members or how to browse the BTS membership in different parts of the world. Note that those BTS members who provided their address information with their names will show up in the browser mode. Those BTS members who opted not to provide their address information, will not show up when you browse the membership by different parts of the world. These members will, however, show up in the search mode if you enter the BTS member's name. The search mode will give the member's name and any additional information provided such as an email address.

Important Access Information: Access to the BTS Membership roster is limited to active BTS members only.

To access, BTS members must have an IEEE web account which is used for authentication. An IEEE web account page can be accessed at http://www.ieee.org/web/aboutus/help/task/my_account/web_account.html for members who need to create an IEEE web account or who need to access or update their existing account information. Please note that IEEE Web Account registration and most members-only services are best viewed with Microsoft Internet Explorer.

For additional information or assistance, please contact Kathy Colabaugh, BTS Administrator, at k.colabaugh@ieee.org.

IEEE BTS AdCom Meeting Summaries for 2006

(Note: The summaries below present brief highlights of the 2006 AdCom meetings. A complete set of approved minutes for each BTS AdCom meeting are on file in the BTS Administrator's office.)

7 January 2006 IEEE BTS AdCom Meeting in Las Vegas with 16 in attendance:

The topics considered for the **BTS IBC 2006 Tutorial Presentation** resulted in selection of a Video Display Technology Tutorial, as a potential tie-in with the BTS co-sponsorship of the IEEE Journal on Display Technology. The tutorial would focus on the different display technologies as replacements for CRTs. The new BTS initiative - **2006 IEEE International Symposium on Broadband Multimedia Systems and Broadcasting** - with assistance from ComSoc, will be co-located with **CTIA WIRELESS 2006** at the Las Vegas Hilton on 6 & 7 April 2006, including luncheons on both days and an evening event on 6 April. The **2007 IEEE International Symposium on Broadband Multimedia Systems and Broadcasting**

(28-29 March 2007, Orlando, FL, USA) conference will be collocated with **CTIA WIRELESS 2007** and **2007 IEEE International Conference on Portable Information Devices**. The Portable Conference will be produced in conjunction with a number of other Societies. The **2005 BTS 55th Annual Broadcast Symposium** registrations were down from the extraordinary attendance the previous year, and the complimentary registrations were up, which indicated that the budget at this point is very tight. The **BTS 2006 NAB Tutorial** is scheduled 24 April 2006 from 1–5 PM featuring a half day **Mobile & Multimedia Broadcasting Tutorial** reprised from the Fall BTS Symposium. The **BTS Publications Committee** reported that the Executive Committee of the **Journal of Display Technology** has approved the BT Society Agreement which was then signed by President Gurley. A **Transactions on Broadcasting Special Issue** was approved for publication in early 2007. The **BTS Newsletter** is recruiting for volunteer Associate Editors to help facilitate the preparation, review, editing and production of articles for publication in the Newsletter.

25 April 2006 IEEE BTS AdCom Dinner Meeting in Las Vegas with 21 in attendance:

AdCom Appointments: According to BTS bylaws, the AdCom can appoint a replacement if a vacancy has occurred or when an AdCom member has not attended four or more consecutive meetings. Two open seats and five vacant seats exist. Several motions, approved unanimously, enabled the AdCom to deal with deciding on the election of AdCom members and forgo the normal balloting process to fill the five vacancies for the class of 2008. Vice President Einolf offered a motion to elect for the class of 2006 - 2008 the candidates of Shumate, Fang, and Simon, and a motion to appoint Brett Jenkins to fill a vacant seat. The meeting attendees gave a round of applause and welcome to the **new BTS AdCom Members: Brett Jenkins, James Fang, Mike Simon and reappointed member Sid Shumate**. President Gurley reported that **BTS Membership** had climbed by 2.7 percent and passed the 2K mark. He hopes that by expanding the BTS into the area of Multimedia, we may be able to draw more people into the Society. **Pablo Anguierra** will help **Eric Wandel** with Membership Strategic Planning. **Michael Bennett** volunteered to be on the Membership Development committee. The **BTS NAB Tutorial** appeared to be very successful. The relatively small tutorial room was packed to capacity including all standing room and floor sitting areas. **Treasurer's report:** The IBC funds are the majority source of the income. **Strategic Planning discussion:** Eric Wandel reviewed the past year's work which included creating a values/vision/mission and goals. **Governance Issues:** President Gurley's term and Vice President Einolf's term expire at the end of 2006. Both positions have term limits of two terms which the President and Vice President have both served. Vice President Einolf cannot serve as the next BTS president because he will be president of the Industrial Electronics Society. A motion was approved to set up a committee to review bylaws and to make a change to the bylaws to add the position of "President-Elect". **Publications Chair's Report:** Journal of Display Technology is running at a deficit and expected to do so in the coming years as it is a new publication. Transactions on Broadcasting will use its full allotment of pages plus the allowed overage. Newsletter is looking good. Mike Bennett reported that **IBC 2005** was a huge success. IBC 2006 is sold out. Dave Bancroft will organize the **IBC 2006 Tutorial** on Video Display Technology. Gerald Berman presented a brief overview of the USTTI history in which he has been involved for more than 20 years offering broadcast technology courses to broadcasters from developing nations worldwide. Approximately 12 students manage to attend this course each year. Yiyan Wu reported on the **2006 BTS IEEE International Symposium on Broadband Multimedia Systems and Broadcasting**. The majority of attendees were young speakers or session chairs. A brief review of the evaluation forms indicates that attendees found high value in the Symposium. The 2007 Symposium will be held during CTIA WIRELESS 2007 in Orlando (28-29 March 2007). The **Fall 2006 IEEE BTS Broadcast Symposium** Call for Papers has been distributed. Abstract review and paper selection is planned for second week of June 2006.

14 June 2006 IEEE BTS AdCom Meeting, Washington, DC, with 13 in attendance:

President Gurley reported that the BTS is currently down by 73 members from last year. An **ITU-T IPTV Focus Group** kickoff meeting will be held in Geneva 10-14 July 2006. Yiyan Wu will send a representative on behalf of the BTS to this meeting. **Staffing Issues:** April Monroe, BTS Senior Administrator will be on maternity leave 1 August 2006 – 1 January 2007. Kathy Colabaugh will fill in for April. An IEEE temporary employee will fill in for Kathy as BTS Publications Administrator. President Gurley would like to increase the BTS funding support next year including support for the BTS website etc. The additional support will augment the current work being performed by volunteers. **Nominations & Elections** – President Gurley reported that two AdCom openings remain for the three year term which began 1 January 2006. **Pablo Angueira and Jon Edwards** were nominated. Elections will be held by email following a review of IEEE's email voting policy. **2007 Society Budget** – Treasurer Lanny Nass & President Tom Gurley reported that a big change from the 2006 budget is the infrastructure charge. The new charge is based on a combination of a Society's non-conference expenses (mainly publications) and a flat tax

across all Societies. The AdCom discussed options for expenditures this year and next. Options included an initiative for a membership development program, improve membership benefits, advance broadcast technology as an industry and promote IEEE BTS membership benefits to employers. **Mike Bennett** offered to serve as **Chair of the Membership Development Committee** for one year. **Strategic Planning: Eric Wandel** stated that the main goal for this meeting is to establish a Membership chair. This was accomplished with the appointment of Mike Bennett. **Publications Report – Vice President Einolf** reported that the Journal of Display Technology has a special issue planned on TV Displays during the 2nd half of 2006. The Transactions on Broadcasting is doing well and adding new Associate Editors regularly. **IBC Report** - Mike Bennett reported that all stand space is sold with a waiting list of over 70 companies. There will be over 1000 exhibitors. 640 manuscripts were submitted for the conference. **BTS Chapter Funding** – President Gurley reported that the St. Petersburg Joint IEEE BTS, CES & ComSoc Chapter is sponsoring the IEEE International Symposium on Consumer Electronics in St. Petersburg 28 June – 1 July 2006. Funds were approved in response to Chapter Chair Dmitry Tkachenko's request that BTS provide funds in the amount of USD 1500 to allow members from his chapter to participate in this event.

26 September 2006 IEEE BTS AdCom Meeting, Washington, DC, with 22 in attendance

President Gurley presented his views on the "State of the Society" about changes seen during his term as President. We are not yet where we need to be, although there are significant improvements. The Society is financially sound, thanks to IBC. The Transactions keeps improving and is now ranked #14 of the 60 communication journals (top 25%). The Newsletter also keeps improving in both length and content. Membership is no longer declining, with BTS being one of the few Societies to show growth in all categories. New areas of expertise and scope are being added to the Society. The new Multimedia Symposium actually made a profit, instead of an anticipated loss. We are in a good place to move forward. Our challenges require that we need to work on retaining members. We need to follow and revise the Strategic plan. The Society's Scope/description needs to be refined. **Eric Wandel** provided a review of the original **Strategic Plan** worksheet. All goals were discussed in detail. Eric identified the need for someone to take over, or co-chair this committee. His term as Member-at-Large ends in 2006. He specifically identified the need for the **Field of Interest (FOI)** to be more clearly defined, encompassing new areas of broadcasting (Goal 1). Governmental structure needs diversity, both technically and geographically. Written responsibilities needed for positions (Goal 2). Adding value and growth to membership (Goals 4 &5) both fall under Membership Chair and committee. All identified Goals need to be carried out in a timely manner. **Brett Jenkins** agreed to re-work the Strategic Plan worksheet into a series of actionable steps. Once the FOI is clarified and advertised, there will be a renewed interest in BTS. Mobile multimedia has rejuvenated interest in Broadcasting. **Mike Bennett** reported a very successful IBC 2006. All stand space was sold. 45,000+ in attendance, which was a 5% increase from 2005. IBC features technical sessions, a "Training Spot" for distributors, as well as commercial sessions. Mobile Zone has grown from 22 spots to 102 this year. The **IBC BTS Tutorial Session on Display Technology** was chaired by **Dave Bancroft** along with five technical presentations and a panel discussion. The session was well received, by 100+ in attendance. **Rich Friedel** was instrumental in getting the speakers. **Mike Bennett** reported that the Membership Committee prepared a membership campaign consisting of a brochure to be displayed at IBC and a memory stick to be given to new members. The success of this program has yet to be determined, but it was at least a start in the right direction. Future plans will be a push to contact non-renewing members. Discussion was held regarding providing value to existing memberships which included several suggestions including expansion of the BTS web-site as a place to go for current information and discussion. **Nominations & Elections – Sid Shumate: Jon Edwards and Pablo Angueira** were approved unanimously to fill the vacant positions of Members-at-Large for the 2006-2008 term. Other nominations: Bill Hayes was nominated for President 2007-2008 and Bill Meintel for Vice President. A motion by Charlie Einolf, seconded by Jules Cohen called to complete the election for the slate of Officers for President and Vice President. The motion passed, and the officers were elected. The AdCom welcomed Bill Hayes and Bill Meintel in their new positions. Suggestions were made for the slate of officers to fill the 2007-2009 Members-at-Large. The nomination period will remain open until October 15th to allow for additional candidates. **Awards – Sid Shumate:** The Scott Helt Memorial Award (**Matthew Rabinowitz and James J. Spilker, Jr.**) and the Matti Siukula Award (**Andy Bater**) to be presented at the 56th Annual Broadcast Symposium. A "Special Presentation Award" (**Gary Sgrignoli**) will be presented at a later date). **Tom Gurley** discussed new Society initiatives which included (a) Requesting recommendations from people/companies that deal with the IEEE web sites to provide their ideas to improve the BTS web site; (b) Funds are set aside for membership campaigns initiatives. (c) IEEE.tv – the Symposium will be videotaped for possible use on the BT web site, or creating a "BTS" channel for IEEE.tv. A committee needs to be formed to put the production together/decide which speakers/sessions should be highlight-

ed. A decision also needs to be made as to how the Society should use this material. IEEE.tv is seeking BTS members for its advisory committee and new directions for IEEE.tv to pursue. **Rich Friedel** has volunteered to find some interested people. **Guy Bouchard** reported that the **56th Annual Broadcast Symposium** preparations are well underway. Registration is up from 2005. Speakers and topics appear to be especially interesting this year. **Jerry Berman** reported on his activities with the **USTTI (US Telecommunications Training Institute**. BTS and Voice of America are co-sponsors of the courses. 150 applications are received, and 8-10 (per class) end up being accepted. Jerry proposed that scholarships be created for several deserving participants who are qualified but do not have the funds to attend. Each scholarship could be up to $5000.00. The AdCom unanimously approved a Motion to authorize the Treasurer to set aside an amount of up to $7,000.00 for USTTI scholarships, as a temporary solution, until a formal Award can be created. The AdCom unanimously approved a motion to start the process of creating a formal Award(s) to be given on an annual basis to deserving USTTI students. The AdCom unanimously approved a motion from **Tom Silliman** to start the process of creating another formal annual scholarship award to be jointly sponsored by BTS and AFCCE. BTS would contribute $4,000 annually toward this award. **Charlie Einolf,** Treasurer for the **Journal of Display Technology**, reported that the Journal seems to be going well. A special Issue on ***Displays for Television*** should be out soon. Yiyan Wu reported that the Transactions of Broadcasting keeps improving. Pages produced for 2007 should top 800. **Bill Meintel** reported that the **BTS Newsletter** keeps improving. The Newsletter is receiving special articles, forwarded from the Transactions on Broadcasting. Chapter reports are another specialty now being published. Tom Gurley/Yiyan Wu reported that the Multimedia Symposium is moving forward with the abstract deadline of October 15. It will be held 28-29 March 2007. The deadline for the scope and topic of the BTS tutorial for NAB is October 12. The BTS tutorial could potentially be on IPTV. **Future Meetings:** The attendees were asked if they still want the January AdCom meeting combined with **CES** in Las Vegas. Discussion was held with pros and cons. Decision will be made by the new BTS President Bill Hayes.

IEEE BTS Argentina Chapter hosts FM and TV Antenna Technical Seminar July 2006

By Valentino Trainotti, Chair, Tom Silliman and Kinsley Jones

The Argentina Chapter of IEEE BTS hosted two presentations titled "FM and TV Antenna Technical Seminar" in July in Buenos Aires, Argentina. Both were presented by Electronics Research, Inc. (ERI) of Chandler, Indiana, USA. On Wednesday, 4 July, a videoconference setup was used to transmit the live presentation via Internet from Buenos Aires to attendees in Rosario, Argentina which is located 300 km (187 miles) northwest of Buenos Aires. The presentation via Internet was delivered successfully without any problems.

The 4 July session was unique since it was the first time the BTS Argentina Chapter made use of a local video conference capability to expand its meetings/conferences to other locations in Argentina and also abroad. This new initiative made use of a special internet line through arrangements with the Argentine Research Council for use of their system. Due to funding limitations, only one remote location, Rosario, Argentina, participated in the 4 July video conference presentation by video conference. Each distant location receiving the streaming video would need compatible equipment and funding of technician to operate the terminal. The BTS Chapter is contacting several Universities in Argentina for funding of equipment and technicians.

The following day, 5 July, an extended version of the presentation was given to a local audience in Buenos Aires.

Both presentations were given by Thomas B. Silliman, ERI's President and CEO, and a IEEE BTS member in the United States. Mr. Silliman was assisted by Kinsley Jones, also of ERI. The topics covered by these presentations included the different technologies and methodologies used to design and build radio and television broadcast antennas, transmission lines, and RF filters to satisfy the needs of modern broadcast facilities worldwide, as exemplified by illustrations and specifications of ERI's wide range of products. Additionally, each presentation focused on the application of each type of product.

Practical information was also provided in the form of extended discussions of the theory and practice of impedance measurement, insertion loss measurement, group delay in filter systems, antenna system performance measurement, and measurement of antenna radiation patterns, both in the factory and in the field using field intensity meters. ERI has both a far field test range and an anechoic chamber for performing factory measurements and both technologies were explained during the presentations. In addition to running the company, Mr. Silliman also has extensive experience

in the field and he shared his personal methods of making field calculations, taking measurement data, and recording his field notes.

Mr. Silliman also shared ERI's considerable experience with the implementation of FM digital HD Radio®, also known as IBOC (In-Band On-Channel), using various methods to address the implementation needs or constraints of different stations, whether operating into individual or multi-station master antennas.

ERI also has expertise with tower structures and Mr. Silliman explained advanced technologies associated with lightning protection and grounding for structures, as well as for accurately observing the condition of guy anchor rods from above ground, using ultrasound technology to improve accuracy while avoiding the need to dig in order to make physical inspections.

In concluding these presentations, Mr. Silliman also commented on ERI's recent achievement of AISC certification and his company's role in writing the ANSI-TIA-1019 construction standard for broadcast towers.

Tom Silliman and Kinsley Jones iving presentation at the BTS Argentina Chapter

The local audience in Buenos Aires was very attentive and asked several insightful questions during the course of the presentation, which Mr. Silliman answered thoughtfully.

For additional information about this presentation, please contact Tom Silliman directly at Tom@eriinc.com

IEEE BTS Chapter Argentina hosts AM Transmitter Theory Seminar August 2006

by Valentino Trainotti, Chair and Steve Spradlin

On 2 August 2006 the BTS Argentina Chapter hosted a seminar on AM transmitter theory and technologies in the Chapter facility in Buenos Aires. The presentation was given by Steve Spradlin, an AM Produce Application Engineer with the Harris Corporation, Broadcast Communications Division in Quincy, Illinois., USA. His topics included the benefits of Digital Amplitude Modulation over Pulse Duration Modulation (PDM) filtering; using solid state efficiencies to lower power consumption and reduce maintenance requirements; expectations of daily operation requirements for AM transmitters; and DRM and HD Radio – the benefits for these digital radio experiences for both the operators and listeners. He provided slides showing predicted and measured performance coverages for DRM and HD digital signals.

The seminar was attended by 25 people including University Professors, Students, and Commercial Broadcasters. The seminar lasted 3 hours including a broad range of questions and technical discussions following the presentation.

Japan BTS Chapter

by Keiichi Kubota, Chair

BTS Japan Chapter held a joint meeting with the Institute of Image Information and Television Engineers (ITE). A technical meeting was held on June 20, 2007 at Kikai Shinko Kaikan, Tokyo, Japan. There were 5 technical presentations on digital satellite broadcasting system, digital SNG system and general topics for broadcasting technology.

The BTS Japan Chapter is planning to conduct four joint future meetings with the Institute of Image Information and Television Engineers (ITE). The scheduled meetings are:

- l July 30-31, 2007 at Hokkaido University, Sapporo, Japan.
- l October 26, 2007 at NHK Nagoya Station, Nagoya, Japan.
- l January, 2008 at NHK Fukuoka Station, Fukuoka, Japan.
- l February, 2008 at Chiba or Nagano, Japan.

As reports of these meetings become available, they will be provided to the BTS Newsletter.

New York BTS Chapter

by Warner W. Johnston, Chair

BTS New York Chapter participated in the West Point Engineering Expo on Friday Sept. 7. Both Cadets and local High School students were in attendance. IEEE spoke with both groups as to the benefits of an engineering career in general and the wide variety of electrical engineering career paths. In addition we spoke to Cadets about the advantages of becoming a student member of IEEE. West Point (Mid Hudson Section) has a large and active Student Section. Their advisor and Warner are working out plans for a tour of the ABC facilities for small groups.

Please add the information below to your appropriate calendars, websites and Monitor announcements.

BTS tutorials are planned on Nov 13, and Dec. 4, both Tuesdays.

The Nov. 13, 2007 tutorial will be on "Captioning, Part I" presented by Warner W. Johnston

The Dec. 4, 2007 tutorial will be on "Captioning, Part II" presented by Warner W. Johnston

In 2008 tutorials are planned for the first Thursday of January, March and May which are Jan. 3, 2008, March 6, 2008, and May 1, 2008.

Topics and speakers for 2008 are not firm, but likely topics are IEEE Standards, Conditional Access in Broadcast Television, MPEG basics, or Multipoint Distribution.

All meetings are at 6:30 PM at 47 West 66th St. (#1 train Lincoln Center - 66th ST. stop). People wishing to attend must contact Warner W. Johnston (212-456-2547 or warner.w.johnston@abc.com) at least 24 hours in advance for admittance. Space is limited.

IEEE UKRI Consumer Electronics and Broadcast Technology Joint Chapter

By R. Simon Sherratt, Chair

I was invited by Ted Kuligowski to submit an article for the BT newsletter on the latest news from the United Kingdom and Republic of Ireland CE and BT Joint Chapter. I hope you find it interesting and there is an invite at the bottom to join us!

The IEEE UKRI Consumer Electronics Chapter formed in 2003 to host the 2004 IEEE International Symposium on Consumer Electronics (ISCE), in the UK. The Symposium was held, went well and all the remaining funds were transferred to the UKRI section bank account ring-fenced for future chapter activities. However, part of this deal was to financially support the 2006 ISCE in St Petersburg, Russia – more about that later.

In 2005 the chapter was approached to see if we would create a joint chapter with BTS. BTS has had a long synergy with CE and indeed many members are indeed members of both Societies. The existing chapter was delighted with this proposal and so we renamed ourselves to the CE and BT Joint Chapter. In 2005 we hosted 2 technical events, one by Dr Vasilios Chouliaras from Loughborough University on parallel threading in custom CPU's particularly for video (de)coding and the other from Dr Sandra Woolley from Birmingham University on Wearable Computing.

In 2006 we sponsored and helped organise the 2006 ISCE, in St. Petersburg. This also went down well and it was great to see Professor Mark Krivocheev get the Engineering Excellence Award for his "outstanding contribution to international standardization of interactive television significantly enlarging functions of consumer terminals" which of course has implications to both CE and BT work. We also had a talk by Omar Rashid on Implications of IMS and SIP on the Evolution of Mobile Applications, funded by the chapter.

For 2007, we are negotiating with a new IEEE Distinguished Lecturer to give a talk and we have also booked a talk on software engineering in embedded systems. We hope to hold both these events around October-November.

We are currently seeking a GOLD representative, so if anyone graduated less than 10 years ago then please contact me. We also need someone to improve our website, http://ewh.ieee.org/r8/ukri/cebt

I have now served 4 years as chair and its time to give someone else a chance. We have one nomination for the new chair for 2008. If you would like to get involved in the Joint Chapter then please contact myself, or your Society.

Yours as always

R. Simon Sherratt
IEEE UKRI Consumer Electronics and Broadcast Technology Joint Chapter.
r.s.sherratt@reading.ac.uk

United States Digital Television System – Another Step Forward?

by Bill Meintel
BTS Vice President and Editor BTS Newsletter

This is to the third in a series of articles documenting the transition to an all digital television system in the United States.

In the previous issues I took you from the beginnings of the transition to an all digital television (DTV) system in the United States in February 1987 to October 2006 when the Federal Communications Commission (FCC) issued a Notice of Proposed Rule Making (NPRM) wherein they listed the channel allotment table and requested comments from the public. Since that time several new developments have taken place.

That Rule Making has now been essentially finalized. On August 6, 2007, the FCC released its Seventh Report and Order (R&O) in the matter of Advanced Television Systems and their Impact Upon the Existing Television Broadcast Service. In that R&O the FCC provided the final post transition DTV channel allotment table. However, at the same time the FCC initiated a Further Notice (Eighth Further Notice of Proposed Rule Making) which proposes channels and station modifications for 13 stations whose requests for modifications were received too late to be included in the new DTV Table. Therefore, the table is not yet complete and the outcome of this latest FNPRM could and is likely to affect stations beyond the 13 listed in the FNPRM. Public comments and reply comments in this proceeding respectively are due on October 10 and October 25, 2007.

As discussed in prior articles, some of the challenges in meeting the February 2009 transition deadline are related to regulatory issues that had yet to be address by the FCC. On April 25, 2007 the FCC adopted another NPRM (FCC Notice of Proposed Rulemaking in the matter of the Third Periodic Review of the Commission's Rules and Policies Affecting the Conversion To Digital Television MB Docket No. 07-91). This NPRM provided some tentative answers to the regulatory issues. As of now public comments and reply comments in this proceeding have been received by the FCC and recent indications from the staff seem to indicate that it might not be finalized until late in 2007 or even be delayed until early next year. Although it is not final, the NPRM did provide the Commission's vision on how they intend the transition to proceed.

The FCC addressed a number of issues in the NPRM; however, I will limit the discussion to what I believe is the most important part. The FCC has indicated that it wishes to limit the number of construction permit applications that it will need to process in order to complete the transition. To that end the Commission does not intend to accept applications for facilities that would extend a station's service beyond that of the facility listed in the allotment table. By so doing the FCC will be able to process applications quickly since they will not need to perform the complex interference analyses required when an expanded service is requested or be concerned that the facilities proposed in the applications would be mutually exclusive. In short the FCC would like to receive only applications from those stations that are required to make a facility change to meet the parameters specified in the yet to be finalized allotment table and have those applications be in close accord with the allotment table parameters.

Unfortunately for stations not remaining on their current DTV channel, the allotment table contains a directional antenna pattern for each station that in many cases cannot be realized in an actual antenna design. These antenna patterns are the result of an attempt to exactly replicate the service contour of a current DTV facility on a different channel and often in a different band (e.g. current DTV in UHF and new allotment in VHF). In addition, the FCC proposes that the predicted service population based on the actual antenna cannot reduce the service by more than five percent from that based on the parameters contained in the plan. This will force stations to specify an antenna that comes as close as possible to the pattern in the table but never exceed it. Again unfortunately, the resulting pattern may not be anywhere near what the station would desire from a service standpoint. In addition, the allotted antenna pattern may very likely have restrictions that were required for interference protection on the previous channel but are irrelevant on the new channel.

A typical example is a station that currently operates DTV on a UHF channel with a side mounted directional antenna and has been allotted its current analog channel for post transition DTV operation. The station would like to use its current top mounted analog antenna for DTV operation; however, it would likely be precluded from doing so since the service contour must not exceed the allotted contour (based on the allotted directional antenna) and at the same time not reduce the service population by more that 5 percent. It should be noted that this scenario only covers one simple case of a station trying to provide the best possible service post transition DTV service. There are likely numerous others that involve site

changes, new tower constructions and even some additional channel changes many of which would be in the public interest but cannot possibly be completed by February 2009.

For facility changes requested after the February 2009 deadline the NPRM proposes to limit the amount of interference that can be caused to another station to 0.5% or the current level if it is greater that 0.5% with no upper limit on the total amount of interference that can be caused by all sources. In most cases this is more restrictive than the current policy whereby the interference can be increased by 2% provided that the total level of interference from all sources does not exceed 10%. Although being more restrictive the proposed criteria is less complicated than the current system and at least gives stations an idea of what expansion may be possible after the deadline.

On the subject of maintaining analog service prior to the deadline, the NPRM seems to reiterate the long standing FCC policy on not allowing service reductions. However, the NPRM also notes that in some cases it may not be possible to perform the necessary construction required to meet the deadline without some disruption of analog service. In view of that, the NPRM seeks comments on how to best achieve the ultimate goal and the amount of justification that will be required to be provided by stations desiring to reduce or terminate analog operation prior to the deadline.

As expected the FCC has received a large number of comments and requests for modifications of the proposed rules to address the concerns noted above as well as other issues not discussed here. Therefore also as noted above, the industry may have to wait until early in 2008 before knowing the final criteria for making the transition. Furthermore, stations that must file an FCC application and be granted a construction permit prior to building their post transition facility will almost certainly have less than a year to complete the construction since the FCC is not yet accepting applications.

In view of the time table, it appears that the prospect of accomplishing what the FCC would desire to occur is fading fast. In discussions with equipment manufacturers at NAB 2007 they indicated that they have the capacity to satisfy the equipment requirements to meet the 2009 deadline but not if the equipment orders are not in hand very soon (at this point meaning now). Although stations can pay and have paid manufacturers ahead of time to guarantee that staff and raw materials will be on hand when needed, no construction can start until the station is able to tell their supplier what to build. At this point many stations cannot or are still reluctant, given the remaining uncertainty, to give the go ahead to begin the manufacturing and installation process.

Beyond the problems discussed here, there has also been very little done to educate the public concerning the pending cessation of analog television transmission. According to the Government Accountability Office (GAO) there are 20 million broadcast-only homes with analog TV sets and all of these will go "dark" in February 2009 unless they are equipped with a means to convert the digital signals back to analog. In addition, there are many more homes with cable or satellite service where off air analog reception is in daily use on secondary receivers. The FCC and the National Telecommunications and Information Administration (NTIA) are just beginning to embark on a consumer education program for which the Congress has authorized $5 million. An interesting note is that this $5 million to educate the 300 million citizens of the United States is miniscule when compared to what is spent in advertising for the launch of almost any consumer product. However, to be fair it is expected that over-the-air broadcasters, other service providers and receiver manufacturers will also spend significant sums on the education process. The problem is that the education process should have been started sooner.

Your comments on this topic are most welcome. Please contact me directly at wmeintel@computer.org.

The 5th ITU-T IPTV FG Meeting Report

Wei Li
Communications Research Centre Canada

The 5th Focus Group IPTV (FG IPTV) meeting was hosted by ITU-T in Geneva, Switzerland from July 23 to 31. More than 200 participants attended this meeting. They represented telecom equipment manufacturers (Huawei, ZTE, Cisco, Alcatel-Lucent, Nortel, Ericsson, Nokia-Siemens, Samsung, Cinea, Motorola, Sony, Digital Fountain, etc.), telecom service providers (Korean Telecom, China Telecom, BT, NHK, NTT, etc.), associations (ISO, ATIS, IEEE/BTS, etc.) as well as research institutions (ETRI of Korea, CRC of Canada, RNIB of UK, Information and Communication University of Korea, etc.). Since this was the last time to propose new work items, a total of 216 incoming contribution documents and 26 incoming liaison statements were received prior to the meeting. This situation represented a 19% increase in documents to be discussed at this meeting than at

the previous meeting. In advance of this meeting, one contribution proposed jointly by IEEE BTS and CRC Canada was submitted to the FG IPTV, titled "Video quality monitoring parameters," which proposed new text for the existing working document of FG IPTV-DOC-0089 (Performance monitoring for IPTV).

On the first day of the plenary meeting, Mr. Ghassem Koleyni, IPTV FG Chairman, opened the meeting with remarks to thank the participants for their efforts in making substantial progress with the FG IPTV activities. Mr. Shin-Gak Kang of ETRI was appointed as the Work Group 4 (WG4) co-chair due to the departure of Mr. Daegun KIM of KT.

The meeting agenda and work plan were approved during the plenary session. The allocation of meeting documents and incoming liaison statements to the six working groups (WG) for discussion was accepted. Five contribution and five income liaison documents were discussed during this session. They covered general concerns within the FG IPTV and related activities of other study groups (SG) and institutions (e.g. activities of SG9, SG16, ETSI TISPAN, etc.). For example, the input liaison document from SG9 (FG IPTV-IL-0076) introduced ITU-T Recommendations developed by SG 9 which have relevance to delivering IPTV services. It also introduced the recently initiated draft in SG 9 on IPTV architecture for secondary distribution network. This liaison statement was further discussed within WG1 and was adopted for inclusion into the working document. FG IPTV-IL-0086 & 0087 from ETSI TISPAN provided updated drafts for IPTV service requirements and architecture. WG1 was requested to consider and discussed the related documents. After discussion, WG1 prepared an outgoing liaison document that discusses TISPAN requirements and suggests alignment as per the progress of the respective works.

The distribution of the contribution documents is listed as follows:

- WG 1 (Architecture and Requirements): 74
- WG 2 (QoS and Performance Aspects): 38
- WG 3 (Service Security and Contents Protection): 20
- WG 4 (IPTV Network Control): 40
- WG 5 (End Systems and Interoperability Aspects): 24
- WG 6 (Middleware, Application and Content Platforms): 48

The distribution of the incoming liaison documents is listed as follows:

- WG 1: 7
- WG 2: 9
- WG 3: 5
- WG 4: 5
- WG 5: 7
- WG 6: 9

Compared with the last meeting, the number of contributions remains almost the same in WG1 (with 4 more this time). WG1 had a full meeting schedule and remained very busy throughout the duration of the IPTV FG meeting. WG2's workload jumped from 24 to 38, a 58% increase comparing with last meeting.

During the remaining meeting days, I mainly participated in activities of WG2 since our contribution was allocated to this group. 38 contribution documents and 9 incoming liaison documents were examined. No new work items were identified at this meeting. The work was continuously focused on the revision, clarification and update of the four existing working documents: (1) QoE (Quality of Experience) requirements for IPTV, (2) traffic management mechanisms for the support of IPTV services, (3) application layer error recovery mechanisms for IPTV and (4) performance monitoring for IPTV. Compared with the last meeting, the titles of the working documents (2) and (3) were modified in order to provide more emphasis on "mechanism" instead of "solution".

Prior to the meeting, we submitted one contribution representing the IEEE BTS and CRC Canada. This contribution proposed new text for the working document on performance monitoring for IPTV. In this contribution, we submitted a proposal to classify the video quality monitoring into three categories: (1) subjective assessment based, (2) objective assessment based, and (3) parameter set based. Descriptions of each of the categories were given. This document was assigned a reference number FG IPTV-C-0769 (C-0769) and was discussed during the first day's late afternoon session. Two other related contributions were also discussed during this session. One related to "requirements for hybrid perceptual/bit-stream models", proposed by Korea (C-0818), another related to "quality-monitoring methods for IPTV", proposed by NTT of Japan (C-0668). During the discussion, the Chairman Mr. Paul Coverdale spoke highly about our proposal and recommended it as a guideline for video quality monitoring methodologies. The participants agreed to incorporate our proposed text to the beginning of section 8.5 "Video quality monitoring" of the actual working document on quality monitoring. A modification was proposed to put the parameter set based assessment into an objective assessment in order to combine the text proposed by Korea (C-0818) to form a consistent section. The Korean and Japanese proposals were also accepted as insertions (subclauses) within our proposal in the same section of the working document.

The following are highlights of WG2 work accomplished during this meeting:

Highlights of incoming liaison statements

- IL-0072 was the response of the DSL Forum to our liaison from the Bled meeting which requested background information on the source of the QoE requirements for video and audio in TR-126. WG2 were satisfied with this response, which confirms that the video and audio requirements have a high degree of credibility.
- IL-0075 from ITU-T SG15 informed about a new work item Home Network Transport Architecture (G.hnta) and provided a draft document. Draft G.hnta contains information on QoS and demarcation points which

are of interest for performance monitoring. IL-0075 was noted.

- IL-0076 from ITU-T SG9 informed about draft new recommendation J.iptvfra and other J series recommendations related to IPTV. SG9 provided several recommendations related to QoE and performance monitoring. These recommendations will be considered under item 7.1 and 7.4 of the performance monitoring document.
- IL-0077 from ITU-T SG9 informed about draft new recommendation J.bitvqm on hybrid perceptual/bitstream models for objective video quality measurements. This will be considered under item 7.4 of the performance monitoring document.
- IL-0088 from ATIS IIF provided the draft QoS metrics for linear broadcast IPTV document. This document is in final review. It will be considered under item 7.4 of the performance monitoring document.
- IL-0089 from ATIS IIF provided comments on the service requirements document. Since the document doesn't include any specific comments related to QoS and QoE, it was just noted.

Highlights of Quality of Experience (QoE) requirements for IPTV

- C-0669 from NTT (Japan) proposed new text on video and audio QoE requirements for IPTV services to be added to the document. This was generally accepted, subject to some wording changes in the editing session.
- C-0809 from Korea proposed to add QoE requirements for the VoD trick mode (fast forward or backward). This was generally accepted, with some wording changes, and removal of the proposed figure.

Highlights of traffic management mechanisms for the support of IPTV services

- C-0651 from ETRI (Korea) provided considerations on QoS over multicast streams for a personal broadcast service. There was no specific proposal, and there is a need for more input on architecture for personal broadcast services. WG2 could not identify any specific traffic management requirements for personal user generated traffic, so no further action was taken.
- C-0804 from Korea proposed to add a new section on multicast replication points to the document. This was agreed in principle for a new section 6.3.1, subject to further editing, and removal of the proposed Figure.
- C-0723 from ICU (Korea) presented considerations on IP QoS and policy management for web-based IPTV content delivery. After discussion, it was agreed that the essence was already essentially covered. Since there was no specific proposal for new text, no further action was taken.
- C-0789 from Huawei (China) proposed to add a new sub-clause on QoS routing mechanisms. This was agreed for inclusion in the document, with the addition of a reference to Rec. Y.1291.
- C-0790 from Huawei (China) proposed modifications to the subclause 6.1.2 on admission control. This was agreed for inclusion in the document, subject to some editing on media stream content.
- C-0791 from Huawei (China) proposed the introduction of the concept of traffic measurement and release mechanism as resource management techniques for IPTV services. This was agreed for inclusion in the document, subject to removing the traffic restoration block shown in the management section of Figure 2 from the actual document.

Highlights of application layer error recovery mechanisms for IPTV

- C-0774 from Digital Fountain proposed to add new sub-clauses on the relation of AL-FEC solutions to the QoS classes in Y.1541 with a focus on DVB AL-FEC to the document. It was agreed to include this into section 10 and as a new clause 9.2.2.3. A definition of the term MTBA will be added to the definition section.
- C-0776 from Digital Fountain proposed to add a new section 8.4 explaining DVB AL-FEC and its usage to the document. This proposal was not accepted at this time but was added to the Living list.
- C-0683 from Sumitomo Electric proposed to change the statement that the use of the DVB-IPI AL-FEC solution is endorsed as the ITU-T AL-FEC solution from "provisionally agreed" to "agreed", on the basis that "provisionally agreed" status is automatically changed to "agreed" status if there is no opposing contribution at the subsequent meeting. It was pointed out that this is not the process being followed in FG IPTV, and further discussion on this topic will be required before any such decision is made.
- C-0777 from Digital Fountain provided resolutions to remaining issues related to DVB AL-FEC and proposed to endorse the DVB-IPI application layer FEC solution as the ITU FG IPTV application layer FEC, to be included as an Annex. The meeting agreed that the procedural roadblocks for the endorsement of the DVB AL-FEC have been removed and agreed to recommend the DVB AL-FEC as an AL-FEC mechanism for IPTV services in section 10. The addition of the new Annex with the specification of the DVB AL-FEC was agreed. It will be replaced by a reference to the DVB specification when published by ETSI. DVB, ATIS IIF and ITU-T SG16 will be informed about this endorsement.

It was noted that DVB AL-FEC supports MPEG-2 transport streams encapsulated in RTP and arbitrary packet flows. In the latter case the original data packets are modified in such a way, that a 4 byte source FEC payload ID is appended to each data

packet. In order to announce the availability of FEC streams and allow the terminal to select the appropriate streams, FEC configuration information must be delivered to the terminal and eventually exchanged with the server. This has to be supported by the service setup and discovery mechanisms and session setup protocols like RTSP. The AL-FEC specification defines the semantics of the required information. WG4 and WG6 were asked to deal with the associated service setup, discovery mechanisms and session setup protocols.

- C-0684 from NEC proposed a mandate that the baseline decoder have a de-jittering function and to clearly state consideration of a CoP3 based multi-layer FEC as a low complexity FEC scheme for high bit rates and long burst losses. The need for a de-jitter buffer is currently stated in the AL-FEC specification. The addition of the new AL-FEC scheme was not accepted, it was added to the living list. For each new proposed AL-FEC submission, the document should include a statement describing its advantages compared to the DVB AL-FEC.
- C-0689 from China Telecom proposed to use a peer to peer retransmission solution for error recovery in multicast delivery. This was not accepted in WG4; therefore, there was no need for WG2 to consider it further.
- C-0745 from Alcatel-Lucent proposed text on retransmission for the document. This was agreed in principle to be included in document, subject to editing

Highlights of performance monitoring for IPTV

- C-0818 from Korea proposed to add a new sub-clause 8.5.6 on hybrid perceptual/bit-stream models for video quality monitoring as presented in IL-0077. In addition, supporting terminal functionality and meta-data were proposed to WG5 and WG6 in C-0817 and C-0819. It was agreed to include the proposal in section 8.5
- C-0668 from NTT proposed to add new sub-clauses on packet layer model and bit stream layer model to clause 8.5 based on the new work item P.NAMS (non-intrusive parametric model for the assessment of performance of multimedia streaming) in ITU-T SG12. It was agreed to include the proposal in section 8.5.
- C-0769 from IEEE BTS and CRC Canada proposed new text for sub-clause 7.2.2 on Video Quality Monitoring. It was agreed to include the proposal into the document as an introduction in section 8.5.
- C-0820 from Korea proposed to add text on quality scores reporting to sub-clause 8.5.1 on back channel requirements. It was agreed to include this in the document. Since the text addresses both video and audio it may be moved to a new section outside of section 8.5 as part of the editing work.
- C-0708 from ZTE proposed modifications and additions to the generalized monitoring method in clause 8.1. It was agreed to include the proposal in section 8.1 of the document.
- C-0690 from China Telecom proposed adding a centralized platform for IPTV monitoring points. It was agreed to update figure 1. However the management platform should collect performance management information from all monitoring points. It was further agreed, that as part of the editing work, to include a short text describing the management platform.
- C-0680 from Pixelmetrix proposed modifications and additions to the monitoring points and parameters table (table 1), service parameter (clause 7.1) and channel parameter (clause 7.2) clauses of the document. Rearrangement of table 1 was agreed. Addition of IP flow list was agreed. A definition of IP flow needs to be provided. Addition of VOD request accuracy (correctness rate) was agreed. A definition was added to 7.1.4 as defined in proposal 5. The naming in the table and the text shall be aligned. It was not agreed to remove the proposed parameters (AAA success rate, connection success, connection time, streaming jitter). The proposed update to figure 2 and additional text will instead be added as new figure and text to section 7. The update to section 7.1.1 was agreed. The addition to 7.1.3 was agreed. The updates to section 7.2, 7.2.1, 7.2.2 and 7.2.3 were agreed with the exception that the sentence on fidelity metrics will be removed.
- C-0681 from Pixelmetrix proposed modifications to figure 1 on monitoring points adding domains. It was agreed to update the figure accordingly.
- C-0694 from China Telecom proposed modifications to the monitoring points and parameters table (table 1). It was agreed to add buffer and decoding delay to the table; however a definition should be provided to the next meetings. AAC success rate could be measured also in domain E. Video/audio bandwidth monitoring will be kept for domains C and D. Connection success rate modifications were accepted. Connection time will not be measured in domain C. The definition of connection time should be extended to cover also measurements at servers. Contributions are invited. Streaming jitter modifications was not accepted. Further clarification on the definition of streaming jitter is needed.
- C-0731 from ICU of Korea proposed to add a new sub-clause 8.3 on network performance monitoring. The inclusion of the text for section 8.3 was agreed; however the procedures as defined for section 8.3.1 were not accepted as they were not seen as realistic.
- C-0682 from Pixelmetrix proposed new text to clause 8.4 “IPTV service attribute monitoring” and an addition to clause 8.5 “Video quality monitoring”. Proposal 1 shows only one example deployment scenario, many others are possible. It was agreed to add the proposal to the

living list and wait for further input. Proposals 2 to 5 were accepted to be included in the document. In the proposed table for section 8.5 the reduced reference method applies also to domain E.

- C-0788 and C-0797 from Huawei proposed to add two new subclauses on overlay measurement and measurement units based on a study item in the living list to our document and to IPTV multicast framework document of WG4 (FG-IPTV-DOC-92). It was agreed to include this into a new Annex. Additional contributions on this issue are invited.

WG2 produced four working documents and four living list documents. It also produced three output liaison documents to ATIS IIF, DVB, ITU-T SG12, ITU-T SG16 respectively.

I also had the opportunity to take part in some of the WG1 discussions. There was a lot of activity relating to the IPTV architecture. More detailed architectural extensions to the three existing IPTV approaches (including Non-NGN IPTV based on existing IPTV networks, NGN-non-IMS IPTV and NGN-IMS-IPTV) were proposed and discussed. New versions of architecture diagrams were produced. Some detailed diagrams created in these sessions were still in dispute and have not been included in the IPTV architectural working document. They were placed in the living list documents for further verification.

In summary, six meeting reports were generated and approved in the plenary session on the last day. A total of 20 working documents, 19 outgoing liaison statements and 13 living list documents were created by all working groups respectively.

The sixth FG IPTV meeting will be held in Tokyo, Japan from 15 to 19 October 2007.

Dr. Wei Li is a research scientist at the Communications Research Centre Canada (CRC). His current research interests include broadband wireless system, DTV system, broadband multimedia processing. Dr. Li is a member of IEEE and BTS.

Work Underway to Develop ATSC Mobile/Handheld Standard

By Jerry Whitaker, VP Standards Development, ATSC

Work began over the summer to develop a comprehensive standard for a mobile digital television service that is backward-compatible with conventional ATSC DTV signals. The Specialist Group on ATSC Mobile/Handheld (TSG/S4) was formed in May to consider proposed systems and develop draft documentation for a complete systems solution. TSG/S4 is being led by Mark Aitken from Sinclair Broadcast Group as Chair, and Dan Borowicz from ION Media as Vice-Chair.

TSG/S4 has been directed to evaluate backwards-compatible proposals for delivery of services to mobile and handheld devices using DTV broadcast signals. This work may include developing recommended changes to existing Standards and/or writing new Standards and—where applicable—associated Recommended Practices. The presence of the new M/H services will not preclude or prevent operation of current ATSC services in the same RF channel or have adverse impact on legacy receiving equipment. Wherever possible, these Standards will build on existing Standards of the ATSC or other standards development organizations (SDOs).

Because the ATSC-M/H project covers a number of technical disciplines, the TSG/S4 work will include liaison with other Specialist and Planning Groups inside the ATSC as well as other SDOs and technology committees working on mobile and handheld technologies.

About ATSC-M/H

Discussion of ATSC M/H has been underway for some time, having been designated a major priority in the ATSC Strategic Plan, approved by the Board of Directors last December. As envisioned, the new ATSC mobile and handheld technologies will be utilized for a variety of services to mobile and handheld devices, which may include but are not limited to:

- Free (advertiser-supported) television content and other services delivered in real-time.
- Mobile and handheld subscription-based TV, video-on-demand (VOD), pay-per-view (PPV), and electronic sell-through (EST) services.
- Non-real-time content download, to playback later.
- Datacasting and interactive television.
- Real-time navigation data for in-vehicle use.

These new services may transmit various types and quantities of content that may be versions of regular TV programming optimized for handheld and/or mobile reception (simulcasting) or audio-visual content and/or data produced specifically for mobile reception.

Estimates of the timeline for finalizing an ATSC-H/M standard are difficult to make given the complexity of the task. However the ATSC Planning Committee, in developing the initial proposal for ATSC-M/H, recognized that broadcasters in the U.S. would like to have the opportunity to announce and launch new mobile and handheld broadcast services before the close of analog services in February 2009.

Proposed Systems

A Request for Proposals (RFP) on ATSC-M/H was issued in May outlin-

ing the following general parameters:

- Scope of the planned work.
- Overall architecture, emphasizing that ATSC is looking to standardize on a complete systems solution.
- Target project schedule.
- Details regarding the materials required for submission.
- The consideration process by which the submissions will be reviewed.
- Administrative and process issues.

By the final response date of July 6, proposals had been received from the following organizations.

- Samsung/Rohde & Schwarz/Nokia (a combined proposal)
- Coherent Logix
- Thomson
- Micronas
- Harris/LGE/Zenith (a combined proposal)
- Qualcomm
- MobiTV
- DTS
- Coding Technologies

The work of reviewing these proposals in detail began on August 2, when a two-day meeting of TSG/S4 was held in Washington, D.C. The committee heard presentations on the various proposals and asked questions regarding specific points. TSG/S4 also agreed on a basic structure for moving forward.

Work Begins

Following considerable discussion, it was decided that in order to meet the aggressive timeline for completion of an ATSC-M/H standard, work on certain elements would need to be done in parallel. Accordingly, three subgroups were established as follows:

- Physical Layer Group, which will focus on the RF, forward-error-correction, and legacy transport elements. The Physical Layer Group is led by Michael Doerr of Coherent Logix as Chair, and Bruce Franca of MSTV as Vice-Chair.
- Management Layer Group, which will focus on the ATSC-M/H transport, signaling, announcement, streaming and file delivery, conditional access, digital rights management, and the application framework. The Management Layer Group is led by Rich Chernock of Triveni Digital as Chair, and Alan Moskowitz of MobiTV as Vice-Chair.
- Presentation Layer Group, which will focus on audio coding, video coding, and image formats.

Discussions of which elements belong in which layer were still underway as this issue went to press. While some changes in how the layers relate may be made, the general framework seems to work well for the task at hand.

Get Involved

Work within ATSC is open to all organizations with a direct and material interest. If you would like to be involved in this or other ongoing work with ATSC, please contact the author at jwhitaker@atsc.org.

Creating and Using the IEEE Recommended Practice for DTV Mask Compliance Measurement

By Linley Gumm
Member, IEEE BTS G2.2 RF Standards Committee

Introduction and Background

This article is the second in a series of three articles about DTV mask compliance measurements. In the previous issue, Greg Best gave an overview of the process used to develop the upcoming IEEE Recommended Practice for DTV Mask Compliance Measurement Document (hereafter referred to as the "document"). This article describes how the document was created and gives an overview of the measurements it recommends. The third and final article by Gary Sgrignoli in a future issue will describe the field trials used to verify these recommended measurement procedures.

Goals

Our overriding goal was to create a document that would provide sufficient guidance to allow broadcasting professionals to make cost effective, repeatable and accurate measurements of a 8-VSB DTV transmitter's emissions for a reasonable cost. Therefore, while the FCC's emissions requirements are briefly described for reference, most of the document is focused on providing a step by step measurement procedure backed up with an extensive tutorial of the essential background theory required to understand the measurement process. Special care was taken to create clear and easy to understand language for those who are performing early morning measurements without enough sleep.

Writing Process

It took twelve major revisions of the document to achieve our goal. Each version was created by me, acting on new ideas and responding to feedback obtained from those who carefully reviewed last revision. The new revision was then read and critiqued by the committee and the process started over.

Each revision moved us forward. Many times what sounded like a promising approach in committee did not work well when written down in detail, and many ideas that looked good when written down in detail didn't work well in the field. The criteria was always "will this approach work well for inexperienced operators and is it reasonable for the station in terms of costs and risks?" For the later revisions, committee members often attempted to use the document as the basis for actual measurements, reporting back what

worked and what didn't. Likewise, the document's language was tested and tuned, trying to reach the goal of a simple but clear text.

As Greg related in the previous article, one of the initial difficulties was that the FCC's published regulations were difficult to interpret. The IEEE BTS G2.2 Standards Committee created an ad hoc interpretation but then found that the procedure required by that interpretation was difficult. Many, many measurements were required, with multiple corrections to be made for things like adjusting noise bandwidths and correcting detector errors. Committee members who tested those procedures reported mixed results and confusion over details. The document kept growing as the text was extended and new sections were added in an attempt to cope with all the detail.

At the request of the committee, the FCC solved the interpretation problem by issuing a Public Notice in May of 2005 "clarifying" the measurement. The first major outcome from this was that the FCC radically simplified the measurements required by allowing the spectrum analyzer's band power measurement mode to be used to make all measurements. This was a major benefit because in this mode, the analyzer will internally make all of the required corrections. Thus the measurement procedure and the theory section that supports it got notably simpler and the document started shrinking.

The second outcome of the FCC's clarification was that compliance could be demonstrated by measurement of emissions in only twelve 500 kHz sub-bands in each of the transmitter's two adjacent channels. The amplitude measured in each sub-band, expressed in dBDTV, is then compared to the amplitude of the FCC's mask at the center of that 500 kHz sub-band. This clarification thus limits the number of measurements required to two or three dozen instead of hundreds plus it uses a measurement mode where the spectrum analyzer makes virtually all the corrections. (In principle, the emissions everywhere outside the transmitter's designated channel must be measured but measurements beyond the two adjacent channels are almost never required.)

Then there was the problem of harmonics. A fairly straightforward procedure was developed to measure the amplitudes of the signal's harmonics using a spectrum analyzer and a high pass filter. It worked well … that is, if a representative sample of the transmitter's signal could be obtained. However, we quickly learned that it was essentially impossible to obtain a representative signal sample from a full service transmitter due to the effects of moding at harmonic frequencies in their large antenna transmission lines. Further, the couplers available to obtain those signals could be calibrated to perhaps 2 GHz but not much beyond; certainly not to the tenth harmonic of a UHF signal. As progress was made on the rest of the document, little was made on the harmonic problem. We ultimately removed this section from the document to allow the adjacent channel measurement procedure to be made available. The committee is making progress on the harmonics issue but it requires further work.

The Basics

Based on the FCC's regulations, the Recommended Practice defines a new unit: dBDTV, which is defined as 10 Log of the ratio of the power of the out-of-channel emissions measured in a 500 kHz bandwidth, divided by the total average power of the 8-VSB transmitter's output in its 6 MHz channel. Because the spectrum analyzer measures all amplitudes in units of dBm (i.e., is already a log value), the amplitude of emissions in dBDTV is easily determined by measuring the emissions (in dBm) over a 500 kHz frequency band using band power markers and subtracting the amplitude (in dBm) of the transmitted 8-VSB signal measured within the transmitter's 6 MHz channel, also using band power markers)

The Instruments

Our goal was to allow the use of inexpensive spectrum analyzers to minimize the cost burden required to make this measurement. No available spectrum analyzer has a dynamic range that can directly measure a Full Service 8-VSB transmitter's emissions to the FCC's required -110 dBDTV level. Some analyzers can directly measure to the Simple and even a few the Stringent masks described in the LPTV and translator rules. Limitations were uncovered that ruled out the use of the very lowest performance spectrum analyzers, but it was found that when an appropriate band stop filter was used, it was quite feasible to use any of the mid performance units on the market that featured a band power measurement capability.

The Measurements

There are several critical factors required to successfully make transmitter emissions measurements. First of all, especially when measuring a Full Service transmitter, a great deal of 8-VSB signal power must be available to bring any -110 dBDTV emission signals above the spectrum analyzer's noise floor. For Full Service transmitters, when using a typical spectrum analyzer, the total 8-VSB signal (in a 6 MHz BW) required from the coupler at a point beyond all of the transmitter's filtering must be at least +27 dBm. Less signal power is required to measure transmitters measured to the FCC's Stringent and Simple masks.

The procedure calls for first carefully connecting the analyzer to that powerful 8-VSB signal and then carefully adjusting the analyzer's input attenuator to maximize the instruments dynamic range capability. The goal is to adjust the signal amplitude at the analyzer's input mixer to a value we call its "sweet spot." The success of the entire measurement depends on this adjustment so the document spends a good deal of

effort educating the user on how to make it. Experience from the field trials gained has shown that once the user has the concept and technique in mind, finding the "sweet spot" is relatively easy. This is one of those areas where the interplay and feedback between the field trials and text polishing paid off handsomely. At this point, the emissions in the first few of the adjacent sub-bands are made. However, at the third or perhaps the fourth sub-band, it will be found that these emissions are very near the analyzer's own measurement floor, preventing further direct measurements.

The Band-Stop Filter

To make it possible to measure emissions in the rest of the sub-bands, a band-stop filter is inserted in front of the spectrum analyzer. This filter uses seven or eight very high-Q trap sections to lower the amplitude of the entire in-channel portion of the 8-VSB signal by at least 46 dB while leaving the amplitude of its emissions in the outer sub-bands essentially unchanged. At this writing, only fixed tuned filters are available at a cost of about $1k. At least for now, a separate filter will be required for each transmitter frequency so most transmitters will need their own. The price is not cheap but acceptable, we felt, to enable such a difficult measurement. A lower performance band-stop filter is required to measure to the FCC's Stringent or the Simple masks with mid performance analyzers. Some high performance analyzers can measure to these masks directly.

When testing, the transmitter is unaltered and untouched to the point where, if adjacent channel ingress signals is not a problem, measurements may be made at any time (e.g., at mid day during sweeps!). If ingress is a problem, operating into a dummy load is recommended to avoid measuring ingress as emissions.

After the filter is inserted, the signal amplitude at the analyzer's input mixer is adjusted to a new "sweet spot" amplitude, about 46 dB more sensitive than the first (by removing input attenuation). Then the emissions in the rest of the sub-bands may be measured to the required -110 dBDTV. Some small corrections must be made to account for the filter's attenuation in these sub-bands, but the procedure is simple.

Limitations

Note that the procedure is designed to ensure that the transmitter is in compliance with the FCC's mask; if the transmitter is very clean, it may not be to be possible to actually measure the amplitude of its emissions in the sub-bands well away from the transmitter's channel.

Afterword

Looking back, I wrote the first draft of the Recommended Practice just over four years ago. It's been fun and very educational and the committee has been excellent. I didn't keep track, but I must have spent well more than 600 hours to write the twelve major revisions that culminated in the final document. I am retired so the time was not a problem and the work was enjoyable (at least for the first nine or ten revisions). At this writing (July), the document has been submitted for balloting, and we expect the results of that process within a few weeks. We will soon start work on some form of a document that includes measuring harmonics, so there is still plenty to do.

About the Author

Linley Gumm is retired. He worked 39 years for Tektronix, designing spectrum analyzers and other RF test equipment. One of his tasks was acting as the system design and technology lead for the RFA300 and RFA300A. He earned his BSEE at Washington State University and his MSEE at the University of Washington. He is a Registered Professional Engineer and for many years provided part-time consulting (i.e., measurement) services for the local broadcasting industry in Portland. He is member of the BTS, a life member of the IEEE and has 22 US patents (with 3 more applications pending).

NTIA releases updated Version 7.0 of the Longley-Rice Irregular Terrain Model

by Sid Shumate
Director of Engineering/Senior Appraiser
Member of the IEEE BTS AdCom and Chair BTS Awards and Nomination Committee
BIA Financial Network & Dataworld

First of a Series:

Longley-Rice, a signal loss prediction methodology, is widely used to predict radio path losses. This methodology, created in the 1960's, was first published in NTIA Tech Note 101 in 1965, revised in 1966 and 1967, implemented into a Computer Method published in ESSA Technical Report ERL 79-ITS 67 in 1968, and developed into the Irregular Terrain Model computer software during the 1970's. It is still considered the standard to which alternative radio reception prediction methods are compared.

The source code for the Irregular Terrain Model (ITM) was originally written in Fortran 66, and was later ported to c++. Most, and perhaps all, commercial and freeware versions of Longley-Rice prediction software including TAP, RFCAD, and SPLAT, and my own developmental freeware, SPLAT with PLOP, use minimally modified versions of the NTIA ITMDLL.cpp software code, with extensive additional input interface and output map-

ping and report generation software wrapped around it, at the core of their commercial or freeware versions of comprehensive Longley-Rice signal prediction mapping software.

The c++ source code has been made available since 2003 as file: ITMDLL.cpp, located on the NTIA's website at http://flattop.its.bldrdoc.gov/itm.html. This port is a direct as possible conversion of the FORTRAN code found in the appendix to NTIA Report TR-82-100, "A Guide to the Use of the ITS Irregular Terrain Model in the Area Prediction Mode" [April, 1982], at http://www.its.bldrdoc.gov/pub/ntia-rpt/82-100/, converted to a Windows DLL-friendly code. The published source code had remained unchanged from at least November 5, 2003 until June 26, 2007. On June 26, 2007, the NTIA quietly released an update to the ITMDLL.cpp software code, via its website.

The earlier version, 1.2.2, is still available at ftp://flattop.its.bldrdoc.gov/itm, as file: ITMDLL_old11-5-03.cpp. The old code does not have a version number embedded in the source code; the new one reports out version 7.0. Caution may be required in making use of the updated version, as the FCC has specifically stated, in OET 69, "Longley Rice Methodology for Evaluation TV Coverage and Interference", that version 1.2.2 is the "version used by the FCC for its evaluations". The FCC also relies on Longley–Rice in estimating television reception coverage for satellite reception waivers, and accepts submissions using Longley-Rice to show whether Cities of License receive city-grade coverage from far-away terrain-limited transmitter sites.

What changes in the new version? I found 205 lines that have been removed, of which 2 are consolidated. The alternative subroutine to ***lrprop, freds lrprop,*** occupying lines 370 to 543, is 174 lines of the 205 removed; 8 lines of code, and 21 lines of comments, also have been removed. There are eight lines of active, mandatory code that have been affected by changes, and four new subroutines, occupying 182 lines, have been added. The first two, ***point_to_point-MDH*** and ***point_to_pointDH***, provide welcome optional alternatives to the normally called ***point_to_point*** subroutine. The other two new subroutines are ***ITMAreadBLoss***, and ***ITMDLLVersion***. Including the spaces and bracket changes, the old version 1.2.2 c++ code has 1,263 lines; the updated version 7.0 code has 1,239 lines.

I will be referring to the changes by line number; to follow along, I suggest that you download the new and old versions of the files and print them out; both are available at: ftp://flattop.its.bldrdoc.gov/itm. To keep track of the line numbers, I load the file into Bloodshed Software's freeware Dev-C++ version 5 (beta) IDE compiler, available at www.bloodshed.net/devcpp.html, and use the print setup and print functions to identify functions by color, word wrap, add line numbers in the margin, and then print.

As to the total active changes to the non-optional subroutines, the action all occurs in one place: the remaining version of subroutine lrprop (a.k.a PaulM_lrprop). Here there are changes between former lines 657 to 674. These changes include: (a.) the if statements and actions on lines 657 and 658, and on lines 665 and 666, are consolidated onto a single line each (a minor change), (b.) the else statement on line 670 becomes an if (! wq) statement (an action suggested in a former comment, removed in the updated version, that was on line 669); (c.) line 671, which states: propa.ak1=(a2-a1)/(d2-d1) is changed to propa.ak1=FORTRAN_DIM(a2-a1)/(d2-d1), and (d.) the else statement and its following actions, on lines 661 to 667, are removed. In the new code, the changed section occupies lines 466 to 473, so what occupied 18 lines now takes up 8 lines.

What does this accomplish? The changes to lrprop replace two "else" statements with a single "if" statement that does the same job; executing the calculations specified in equations 4.40, 4.41, and 4.42 of "The ITS Irregular Terrain Model, version 1.2.2 The Algorithm" by George Hufford, found at: http://flattop.its.bldrdoc.gov/itm/itm_alg.pdf .

It appears that no code or math errors are repaired, or will be caused by this change to ***lrprop***.

What do the new subroutines do? The first two, ***point_to_pointDH*** and ***point_to_pointMDH***, provide optional alternatives to the point_to_point subroutine normally called by the separate input-output wraparound software for point-to-point mode signal path loss profiles and detailed area signal level mapping calculations. ***point_to_pointDH***, the "Point-to-point calculations, Delta H" subroutine has only two changes; (1.) It changes "char *strmode" to char strmode[100] and moves it out of the line of declarations on line 920 to have its own place on line 1095. (2.) In its place on line 920 is a new declaration, **double** &deltaH, and at line 1132, a new line stating: deltaH = prop.dh; the second set of changes therefore declare a new local argument, deltaH, that can be read by a wraparound program without reading array "prop", in the same way that "errnum" can be read, and set its value equal to the value held by prop.dh, which represents delta H, (DH), the terrain irregularity factor.

point_to_pointMDH, "Point-to-point calculations with Mode numbers and Delta H", includes the second set of changes in ***point_to_pointDH*** above, and provides two additional significant, and welcome, changes. (1.) The string mode (strmode) setup to allow printing out the mode, which causes, for example, the reports in SPLAT to print out "Line-of-Sight Mode" hundreds or thousands of times, followed by "Single Horizon" etc., has been replace with a simple numerical code. The code is: -1, undefined; 0; line-of-sight, 5, Single Horizon, Diffraction; 6, Single Horizon, Troposcatter; 9, Double Horizon, Diffraction; and 10, Double Horizon, Troposcatter. The new comments

included in the source code explain the numerical codes. The numerical value is loaded into a new argument: propmode, which is declared as **int** &propmode in line 994, allowing it to be read by the calling wraparound software in the same way as errnum can be read. Last but not least, (2.) The existing **point_to_point** subroutine calculates variable amounts of statistical reliability for percentage of time, and confidence, but calls subroutine ***avar*** with its location percentage set to zero. The new ***point_to_pointMDH*** subroutine declares a new argument, zloc, for location percentage, sets it to be equal to the value stored in array qerfi (locpct), and allows subroutine ***avar*** to be called with this value as the location percentage input, allowing statistics to be generated for time, location and confidence in the point_to_point mode, instead of the former limitation of only time and confidence.

ITMAreadBLoss, "ITM Area dB Loss", when called, calls subroutine area, "Area mode calculations", and reports out the value of "dbloss" calculated by subroutine ***area. ITMDLLVersion( )***, "ITMDLL Version Number" when called, reports out "7.0".

The ITM predicts signal strength loss in three "modes". The first, starting at the transmission site, is the line of sight mode, which switches to the edge diffraction mode where the path threatens to graze the earth for smooth earth (at the horizon) or at an obstruction. As the path length increases, the edge diffraction dominant mode fades into the troposcatter dominant mode, and goes to full troposcatter mode at far distances. Even after thirty years in use, there are still mathematical and coding errors and obsolete computer approximations in the ITM code that affect the quality of the predictions in all three modes. These problems have not been addressed, and remain uncorrected, in version 7.0. Many of these errors track back to, and can be seen in the FORTRAN version found in Appendix A of NTIA Report TR-82-100, and have therefore existed for a quarter of a century. In the following articles, I will address the coding and mathematical errors in the subroutines found in both c++ versions.

About the Author

Sidney E. Shumate serves as the Senior Appraiser and Director of Engineering for the BIA Financial Network (BIAfn), a financial consulting firm specializing in the appraisal and inspection of broadcasting and related media properties, preparation of bank presentations for communications clients, and litigation support. During the last ten years at BIAfn, Mr. Shumate has inspected and appraised broadcast and media-related properties in 43 U.S. states and Puerto Rico. He is now BIAfn's primary review appraiser, and has prepared reports for litigation support and testified as an expert witness.

Loy Barton, a Forgotten Radio Pioneer

by James E. O'Neal
Technology Editor for TV Technology and member BTS History Committee

For several years now, I've done a straw poll in the radio hall at the NAB convention, stopping passersby and asking them if they had ever heard of Loy Edgar Barton. I've made it a point to ask the silvery- or white-haired crowd, not kids who appeared to be fresh out of school.

Loy E. Barton and one of his sunflowers. Coutesy Sarnoff Library

To date, no one has been able to offer a clue to Barton's identity and his place in the history of radio.

To save a little time, I'm going to go ahead and give away his secret. He was the individual who set forth the principle of high-level Class B plate modulation.

This was in the early 1930s. From then on, virtually all of the medium- to low- power AM transmitters (and even some of the high-powered rigs) used anywhere in the world were Class B plate-modulated.

Barton's modulation scheme set the standard for nearly five decades of AM radio, until solid-state transmitters and some radically new modulation techniques began to dethrone it in the late 1970s.

Most all of us associate Armstrong with FM; Colpitts and Hartley with oscillators; de Forest with the vacuum tube; Yagi and Beverage with their antennas; and, if you're really into this sort of thing, perhaps Black with negative feedback.

Barton's name draws no such recognition and he's mentioned in few radio engineering books.

F.E. Terman's 1937 "Radio Engineer-ing" does cite Barton in a section on Class B amplification, but he's nowhere to be found in the chapter on modulation. Even Andrew Inglis in his otherwise excellent 1990 broadcasting history book, "Behind the Tube," slights Barton and his accomplishment. Inglis presents Barton's modulator circuit while describing the work of another inventor. In fact, Barton really doesn't appear to be associated with the science of radio at all.

How is it that Barton and an

accomplishment as important as Class B plate modulation could be completely overlooked and forgotten?

Barton's story properly begins in what is recognized today as the very infancy of broadcasting, that period in the early 1920s when the public at large was introduced to radio.

Fessenden Again

More than 15 years earlier, Reginald A. Fessenden developed the world's first AM transmitter. He did it very simply and with the materials available to him, by connecting a carbon microphone in series with the transmitter's antenna circuit.

Sound waves caused the resistance of the microphone element to vary and the varying resistance produced a change in antenna current: AM!

However, there were some real drawbacks to this technique. First, as there was no amplification, it was not very efficient; i.e., there was not that much change in antenna current with reasonable audio levels. About the best depth of modulation that could be achieved was perhaps 5 to 10 percent.

Second, as the microphone was passing all of the antenna current, it got quite hot. Fessenden solved this problem to some degree by using platinum-iridium electrodes and water cooling.

Raymond Heising

It took several more years and a Bell scientist named Raymond Heising to develop a much improved modulation scheme.

Heising, or constant-current modulation as it is sometimes known, can best be explained by referring to Fig. 1, which is adapted directly from Barton's master's thesis document.

The plate of the modulator tube is tied to the plate of the RF amplifier (actually a power oscillator, as was state of the art at the time) with a common iron core choke supplying DC potential to both. As audio input level to the modulator tube rises, the tube tries to draw more plate current, but the inductor tends to resist this change and the plate voltage drops. (The inductor is trying to maintain a constant current flow.)

As the common plate voltage drops, the RF amplifier gets less of its share and antenna current is reduced. As the audio level drops, things start to get back to normal with the modulator plate current requirements dropping off. Again the change in current is resisted by the inductor and this turn lets the RF amplifier plate potential rise, increasing antenna current.

Heising's circuit became the basis for most all early broadcast transmitters, with Western Electric either manufacturing them or licensing the technology to other vendors.

Enter Loy Barton

Barton was an Arkansas native who entered engineering school in 1917 in a Land-Grant school located in his home town. This was the University of Arkansas in Fayetteville. After receiving his bachelor's degree, Barton worked for a while as an instructor in mechanical engineering at the school.

He was keenly interested in electricity and radio and went on to pursue advanced studies in this field. By 1924, he was ready to take on a "hands-on" practical engineering project that was part of the college's graduation requirement.

A "Cinderella" project was offered by the faculty and Barton was quick to accept.

A few years earlier, the school had contracted with a commercial firm to build a campus radio station. What was delivered was a rather crude 100 watt transmitter that proved far from satisfactory. The engineering faculty felt that the best solution was a new 500 watt transmitter constructed "in house" and under their auspices. Barton and another student were given a budget and the task of designing and building everything from the microphone pre-amplifier to the antenna.

A copy of Barton's thesis details the areas of power supplies, antenna and counterpoise, audio amplifiers, oscillator, and of course, the modulator. Barton was more intrigued with the modulator circuitry than with anything else and begins his thesis with a thorough analysis of the state-of-the art Heising modulator.

He concludes several things. First, as the iron core inductor sourcing plate voltage to both the modulator tube and RF amplifier (power oscillator) will never allow the RF amplifier plate voltage to drop to zero, or on the other swing, double plate voltage, 100 percent modulation of the carrier is impossible.

Second, the circuit is grossly inefficient, as the audio amplifier is single-ended and has to be operated in Class A mode. To compound the problem, this Class A audio amplifier has to develop least as much power as the RF amplifier that it modulates! (This was carried to the extreme with Western Electric's early Heising-modulated 50 kW transmitters — AC input power was in the neighborhood of 250 kW!)

Genius

In his thesis, Barton has a stroke of genius as he analyzes the Heising circuit and states:

"Therefore, it is impossible to get 100 percent modulation, or apparently approximat (sic) to it, unless there is considerable power in the modulators. The above discussion has suggested to the writer the use of a transformer instead of the choke XL_1 with the modulator plate circuit through the primary and the oscillator plate through the secondary."

That is, if the choke were to be replaced by a suitable transformer with the input side forming the audio

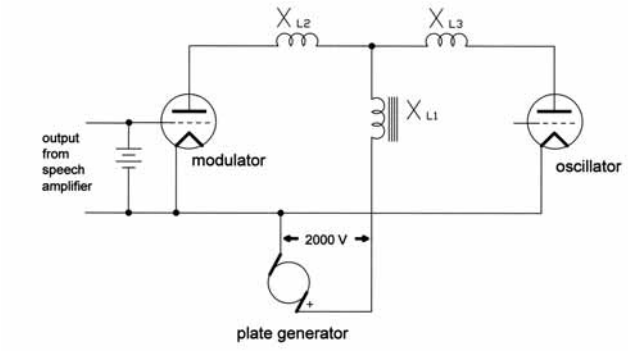

Heising modulation (adapted from Barton's 1925 thesis drawings)

The 11-foot modulation transformers used in the WLW 500,000 W plate-modulated transmitter. Image courtesy of Charles Stinger, AWA.

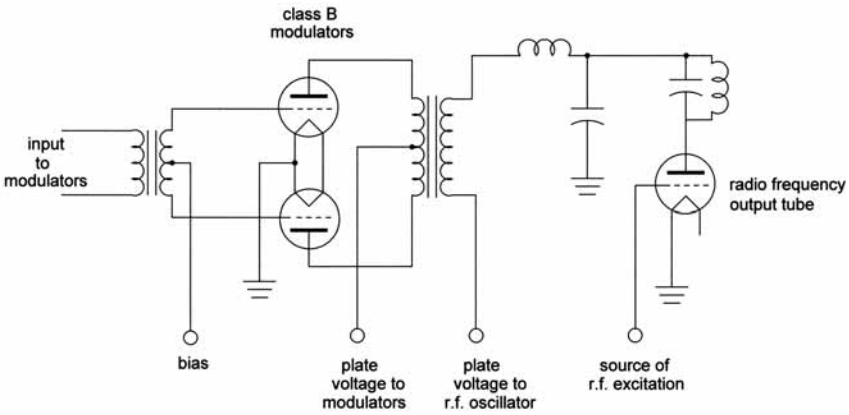

High-level Class B plate modulation circuit (adapted from Barton's article in the 1930 University of Arkansas Bulletin).

amplifier plate load and the secondary providing plate voltage to the RF amplifier, transmitter modulation might be considerably bettered.

However, Barton continues, "The writer will not have the time to test or try the idea for this paper."

The new school station (KUOA) ultimately was a success, with reception reports coming from all over the United States and the Caribbean. Barton received his degree and departed for Schenectady and a job at General Electric.

After a couple of years battling the upstate New York climate and the corporate structure of GE, Barton decided that the job was not his true calling and returned to Arkansas, where he was hired on back at his alma mater as an assistant electrical engineering professor.

The modulation improvement idea developed during his thesis work kept haunting him and before long he was able to get funding for construction of a special transformer needed to test his idea (the world's first plate-modulation transformer). The 600-pound transformer arrived and KUOA's transmitter was reworked with it. As predicted the (now) 1 kW rig's depth of modulation and operating efficiency were greatly enhanced.

Barton, by then an associate professor of electrical engineering, published his findings in an obscure little journal, the University of Arkansas Bulletin, a tome more at home with papers on such topics as "Origin and Performance of Principal Cotton Varieties in Arkansas" or "Problems Relating to the Fabrication of Building Boards."

Barton's modulation paper appeared in the edition dated May, 1930 — Bulletin No. 8, under the unassuming title "A Plate Modulation Transformer for Radio Stations."

One has to question why Barton and the university would allow something this revolutionary to go virtually unnoticed. Perhaps it was that the Great Depression had arrived in full form and there wasn't money available for attorneys and a patent filing. Perhaps no one in the school really understood the significance of what Barton had done and that there was some real money to be made with the invention. Perhaps Barton was modest and didn't think that what he'd done was really that big a deal.

Nearly 80 years have passed since that first transmitter went on the air with Class B plate modulation and none are left who might have been able to shed some light.

Off to Camden

Somehow the troops in Camden got word of Barton's modulator. Shortly thereafter he left Fayetteville and academia for South Jersey and the Radio Corporation of America.

Barton's modulator circuit and modulation methodology were offered up to the patent office in January 1932 and he eventually received U.S. patent number 2,063,290 under the rather deceptive name "Radio Signaling System."

It's a given that the patent was assigned to RCA.

It was typical in those days for companies such as RCA and Western Electric to reward employees for patent assignments with tokens such as $50 savings bonds.

Of course, working for such a company as RCA offered perks that were not monetary. A very big project was brewing there in the early 1930s.

Not content with a mere 50,000 watts at Cincinnati's WLW, owner Powell Crosley Jr. placed an order with RCA for a one-half megawatt machine. Class B high-level plate modulation would be used in its construction and ownership of Barton's patent would come in quite handy. One must speculate that it must have been very satisfying for Barton to witness such a scaling up of the modulator he built for the 1 kW rig back in Fayetteville. This time it was a 400,000 W push-pull Class B audio amplifier, built around eight of the awesome

UV-862 100 kW water-cooled tubes and two 11-foot tall, 50-ton modulation transformers.

Barton published several articles in the RCA house publication, Broadcast News. In his first article on modulation in June, 1935, the editor added a note to Barton's article with the information, "It is significant that Loy E. Barton is the originator of Class B Modulation, having started his development of this system while he was instructor in the University of Arkansas. He has contributed greatly to the present Class B Modulation system employed by RCA, and is considered the outstanding authority on the subject of Class B and other types of Modulation. — Ed."

Radio-powered car

Once the giant WLW transmitter was up and running and had settled into some degree of reliability, there was time for a little idle thought and daydreaming.

For Barton, this was in the form of a memo dated March 1, 1934 and addressed to his supervisor, I.R. Baker. In what even 70 years later reads like science fiction, Barton lays out plans for a radio-powered car.

"Some time ago I suggested to you and Mr. L. F. Jones the possibility of picking up enough energy from the WLW antenna to operate a car along the highway near the new WLW transmitter. I have checked with Dr. (George) Brown, of the Research Division, as to the probably (sic) energy pickup at distances of up to about one-fourth mile from the antenna … The results of the preliminary consideration of the problem indicate that about 200 watts may be picked up on a loop at distances up to one-fourth mile and that circuit arrangements can be devised to supply power to a 1/8 horsepower motor."

Barton went on to speculate that it might be possible to construct a vehicle from a stripped Austin chassis capable of carrying one person at three to five mph on level pavement. He admitted that such a vehicle would serve no useful purpose other than for publicity, concluding, "The cost of construction and demonstration of such a car will, I believe, be quite small as compared to the publicity derived …"

As there's no record of such a car having been built, Barton's argument probably didn't win over any of the top brass at RCA. There would also be the matter of a suitable rectifier, as silicon diodes were several decades in the future.

Barton's career did stretch into that solid-state future, and by the 1950s he was designing transistor radios and other semiconductor circuitry with the best of them.

Barton continued his career track at RCA and along the way produced a few more patents; his name appears on a total of 83.

His interest in modulation and Class B operation never waned and he published articles on these subjects in RCA's Broadcast News, Proceedings of the IRE and the amateur radio publication QST, among others.

Color burst

In the early 1950s, Barton was a member of the group that worked round the clock to develop compatible color television and was assigned the task of keeping a receiver's local subcarrier oscillator locked to the color transmission source. Ultimately, Barton shared the patent for the principle of the color synchronizing burst with Peter Werenfels.

Barton still had roots in Arkansas and occasionally returned to his home town to visit relatives. He also felt strong ties to his school and never missed an opportunity to stop in and visit former associates and to guest-lecture engineering classes.

Jim Haynes, an engineering student at the University of Arkansas in the 1950s, recalls Barton appearing on campus several times.

"He popped in one day and lectured to us about this new solid-state device he referred to as the "thyristor," Haynes said. "It was so new that few of us had heard about it. I had read something about a silicon-controlled rectifier though, and I finally put the two together."

Haynes recalls locating and moving the special modulation transformer that Barton had designed in 1928.

"Around 1957, one of the professors recognized it in a storage closet and we all thought it could be put to good use in the school's ham station, K5YM," said Haynes. "It was extremely heavy and I don't think that we could have gotten it up to the third-floor shack without the freight elevator."

The planned modulator was never constructed and the ham shack and transformer continued to move around the campus until the latter finally disappeared, possibly falling victim to a scrap yard or local landfill.

Barton retired from RCA in the mid-1960s after some 35 years with the company. (Patent records indicate that in the late 1930s he defected for a couple of years, going across the Delaware River to work for rival Philco.) His career spanned the start-up of the earliest broadcast stations all the way to the invention of the chip.

RCA continued to sell Class B plate-modulated transmitters into the last decade of that company's existence. There is no record of the amount of money that Barton's patent produced for RCA through transmitter sales and licensing agreements, though it had to have been substantial.

Barton continued working and inventing practically to the end. His last patent was issued after his retirement from RCA and dealt with textile mill machinery.

Not a great deal is known about Barton's personal life. However, a 1960 article in the University of Arkansas's Arkansas Alumnus magazine provides a bit of information in an article titled, "What College Did For Me."

The 62-year-old Barton wrote: "In fact some make up for the things they could not do as students back in the days when money was scarce … To compensate for the lack of social

activity, I now have the time and money to do some of the things I wish I could have done in college. For example, I am learning to dance. I will be retiring in three years and I am making an effort to be ready for the new venture.

"When I started college the one thing that helped me the most was that I was not afraid of work and had plenty of courage. In fact, the principal reason for taking electrical engineering was that it was reputed to be the most difficult course in college."

In the article, Barton recalled that the "best boost anyone could ask for" was his development of the Class B amplifier and its use in high-level modulation. He estimated then that more than 90 percent of broadcasting stations were using his modulation technique.

Loy Edgar Barton died in 1986 at the age of 89.

So, from now on, when you think about Class B amplifier operation and especially the utilization of Class B for plate-modulating AM rigs, think about Loy Barton. Even though high-level Class B plate is nearing its 80th birthday and has been largely replaced by other methodologies, I propose that from here on it be referred to as "Barton modulation."

Special acknowledgement is given to Jim Haynes for his assistance in preparing this article. Haynes published an article about Barton in the June, 2003 issue of Electric Radio magazine.

More Info

The author used the following sources for this article, which may be of interest to those who wish to learn more about the topic.

U.S. patent no. 2,594,380

Baker, I.R., "A Visit to the New WLW"; (RCA) Broadcast News, Feb., 1934.

Barton, Loy Edgar, "The Design, Construction, and Operation of the 500-Watt Broadcasting Station of the University of Arkansas"; thesis submitted May 13, 1925

Barton, Loy E., "High-Power Audio from Relatively Small Tubes"; Proc. of the IRE, July, 1931

Barton, Loy E., "Application of Class B Audio Amplifier to A-C Operated Receivers"; Proc. of the IRE, July, 1932

Barton, Loy E., "Class B Audio Amplifier as Modulator For Broadcasting Stations"; Radio Engineering, July, 1933

Barton, Loy E., "Modulation System For Transmitters"; (RCA) Broadcast News, June, 1935

Barton, Loy E., "Some Further Thoughts on Modulation"; (RCA) Broadcast News, Dec., 1935

Barton, Loy E., "Recent Developments of Class B Audio and Radio Frequency Amplifiers"; Proc. IRE, July, 1936.

Brown, George, "And Part of Which I Was," Princeton, J.J.; Angus Cupar Publishers, 1979.

Poindexter, Ray, "Arkansas Airwaves," Cassville, Mo.; Litho Printers, 1974.

"Did WLW Propel A Car? — Telecommunication," edited by Don DeNeuf, The Old Timer's Bulletin (Antique Wireless Association publication), May, 1990.

About the Author

James O'Neal graduated from the University of Arkansas. He retired from the Voice of America in 2005 and has more than 36 years of experience in broadcast engineering. He is now technology editor for the TV Technology Magazine.

A Pricing Algorithm for Mixtures of TV Programming and Commercials

by Roumen Vragov, Baruch College, CUNY and Ilan Levine, Mount Olive College

Abstract - ***The MHP technical standard allows TV viewers to interact directly with the broadcasted content and therefore be able to choose which commercials they would like to watch. This article outlines the basic conceptual features of an interactive application that can be used by TV networks to increase the efficiency of advertising. The application allows advertisers to bid for advertising slots, and it allows viewers to pick which combination of commercials they would like to watch. We describe a pricing algorithm based on this application that the TV network can use to determine a new subscription fee that can increase network revenues.***

Index Terms – interactive TV, advertising, paid placement, auction algorithms

I. INTRODUCTION

The wide adoption of DVRs has revolutionized the way consumers watch TV. It has also threatened to eat into the $52 billion of advertising revenues that spot TV, cable TV, and network TV received in 2005 [11]. At the same time Internet advertising revenues have soared to pre-dot- combust levels of $8 billion, and this does not include revenues from sponsored search on Google, Yahoo, and other search engines, which is expected to breach the $6 billion mark next year [8]. Meanwhile technology has altered the viewing

habits of consumers, specifically the highly coveted by advertisers 18-34 year olds. TV shows on DVD, TV shows on peer to peer networks, Tivo/DVRs, and video entertainment on the Internet (youtube.com, video.google.com) all allow the bypassing of traditional TV commercials. Advertisers seeking less waste and better return on investment are faced with a unique challenge caused by technology; however, technology also holds great potential to make traditional advertising obsolete and allow direct marketing via the TV to be very profitable.

To meet this challenge TV companies are considering the use of a new technical standard MHP (multimedia home platform), which allows consumers to interact directly with the broadcast content among other things[1]. This article argues that an interactive electronic auction application (within MHP) can help the TV network decide which commercials to show to which consumers in a more efficient way than current methods. If properly designed, the application will have the potential to increase the network's revenue as well as consumer satisfaction and advertiser's profits. In addition this paper discusses an off-line pricing algorithm that accomplishes this goal.

II. BACKGROUND

The TV industry's direct function is to provide entertainment in the form of various programs to its viewers. At the same time TV is used to transmit advertising messages from businesses to consumers. From a consumer point of view there are two currently available modes to use one's TV. One is to use an antenna and receive several channels for free, and the other is to subscribe to either cable or satellite TV, pay a monthly subscription fee, and enjoy various packages of channels. Under the first mode the TV networks are either publicly financed or receive their funding from the commercials that they show. Under the second mode, TV companies have one more source of revenue – the consumers' subscription fee.

For a long time advertisers and TV stations have been trying to increase the efficiency of advertising. The problem stems from the fact that too much time and money is wasted in showing irrelevant commercials to consumers. For example, it is often the case that car insurance commercials or gas commercials are shown to viewers who do not own cars, or commercials for very expensive items are shown to viewers with lower income levels. The usual approach currently in use, is that networks track the demographic characteristics of viewers of a certain show on TV. Then they sell advertising slots in that show to businesses which are potentially interested in these demographics. The match is usually not very good [1]. This statistical modeling is good at generalizing and targeting average consumers. Any improvement over that is highly appreciated by advertisers.

Advances in information and telecommunication technologies have provided various tools that can be used to increase the efficiency of advertising and receive more information about the demographics of viewers. First came interactive TV architectures and protocols, which have been around for 10 years or so [6]. More recently researchers at IBM proposed a new interactive architecture for selectively inserting interactive TV content into a live TV broadcast [14]. LOOP is a mobile technology that allows viewers to interact with TV shows by sending text or picture messages [3]. These can be used to make better inferences about viewer preferences for various products. Invidi Technologies has invented and is currently testing a system for hyper-targeting of viewers. Judging by the way different viewers use the remote control the system can classify the viewer into a demographic category and show commercials that are specifically targeted to that category. Phillips plans to use another new technology based on MHP to temporarily disable a consumer's remote control during showing of commercials unless the consumer is willing to pay a fee [10].

Research on the profitability potential of these technologies has been scant; however, none of these options consider the possibility of giving viewers full freedom to choose the commercials that they would like to watch. A paradigm shift in the way advertiser's target consumers is necessary so that individuals and not demographics are targeted directly through self-selection. Phillips' proposal comes the closest to achieving this goal; however, under Phillipss implementation strategy, a viewer might need to skip many commercials before she finds one that she enjoys or finds useful. Skipping commercials and paying every time when skipping is a complex decision-making problem which involves dynamic optimization. This might prove too burdensome for viewers. It also simplifies the problem to an all or nothing choice where affluent people who value time would most likely pay to skip all commercials (which they might already be doing in one form or another) and other consumers with less disposable income, would still be subjected to commercials which did not apply to them.

One way to introduce this freedom of choice is to utilize posted price algorithms when deciding how and to whom to display commercials and utilizing auctions when deciding which commercials to show. Recent successful attempts are the advertising auctions conducted by Google and Yahoo. In these auctions, businesses bid for keywords that are related to their products. When a visitor performs a web search using certain keywords, he or she receives a search results page which contains a list of sponsored ads for the businesses who "bought" these keywords. The ads on the search page are ranked by the amount of the bid and the past click-through rate of the given ad. Every time a user clicks on an ad, the business pays Google the amount of the bid for the keyword used[2]. We expect the targeting efficiency of this approach to be higher than that of TV advertising because, instead of targeting a certain demographic, the ads on

[1] MHP Standard and specs can be found at www.mhp.org or at www.etsi.org

[2] See http://www.google.com/ads/ for a fuller description of Google's auction and http://smallbusiness.yahoo.com/marketing/sponsoredsearch.php for Yahoo's auction

Google are targeting every user/viewer specifically. The ads are not invasive, and the user is not forced to click on an ad but chooses to do so voluntarily. At the same time businesses only pay for consumers who actually visit their sites.

TV programs, which are free for viewers, can use similar auctions to display a list of possible commercials from which a consumer can choose. Thus free TV programs can achieve advertising efficiency that is similar to that of these popular search engines. The purpose of this paper is to describe and evaluate a pricing algorithm that TV networks can use to decide on subscription fees and to describe an auction mechanism to decide which commercials to offer to viewers. We use past theoretical developments, a working example, and a simplified model of viewer choice to illustrate the value of the approach.

III. A WORKING EXAMPLE

Suppose that there are three consumers marked by C_1, C_2, and C_3. All three consumers have a positive but different value for a TV program *P*. These values are shown in Table I. A value represents how much money a consumer will be willing to pay to see program *P* with a different number of commercials. Suppose that it is possible to show up to three commercials during the time that is necessary to watch program *P*. Every time a commercial is shown a consumer's satisfaction that comes from watching program *P* decreases (see [9]), so the consumer's value for watching program *P* also decreases as shown in Table I. For simplicity, we will assume in this example that a commercial for the same product cannot be shown more than once during the same program.

TABLE I.
Consumer values for program P depending on the number of broadcasted commercials.

Consumer	Value for *P* with various number of ads			
	0	**1**	**2**	**3**
C_1	10	7	3	0
C_2	6	4	2	0
C_3	3	2	1	0

Let us assume further that the three available commercials are advertising three different products A, B, and C respectively. Generally, previous literature divides advertising into two different kinds: informative and persuasive (see [7] and [2]). Informative advertising gives information about a product, which was previously unknown. A good example will be the advertisement of a new cancer treatment that had previously not existed. Persuasive advertising exercises psychological influence on consumer's satisfaction of a product or a company which is already known. A good example would be a Coca-cola commercial. Here we will consider the persuasive type of commercials only. We assume that consumers have a good idea about the type of products and features that they are seeking and they have an idea of how much their value for the different products will increase if they decide to watch a commercial for these products based on a short product description, product category, or a company name. Usually the gain from advertising to consumers is modeled as an increase of the consumers' willingness to pay for the product being advertised (for an example see [5]). If the consumer is willing to pay $3.00 for a product before advertising and $4.00 after advertising, this means that advertising added a $1.00 of value to the consumer's willingness to pay. Table II shows consumers' values-added (they can be expressed in any currency) for the different products after they have seen a commercial for them. This can be also interpreted as the added value of information or knowledge that customers receive about a product from viewing a commercial about it.

TABLE II.
Consumer value added from the commercials for products A, B, and C after the consumer has seen a commercial.

Consumer	Value added by commercial for product:		
	A	B	C
C_1	5	1	2
C_2	2	4	1
C_3	1	0	4

We will first investigate the case in which the TV network does not have the ability to show different commercials to different consumers. Table III below shows the total consumer value for all possible combinations of advertising shown. The calculation is performed in the following way: If the network decides to show only the commercial for product A, then the total consumer value for watching program P will be equal to the sum of all numbers in the "1 commercial" column of Table I, which is 13. To this we have to add the net value-added that will be gained from watching the commercial about the product, i.e. the sum of all values in column A of Table II, which is 8. Thus we can find the total value to consumers of displaying one commercial advertising product A: it is 21. We can do the same for showing two or three ads to all the consumers. Looking at Table III we can see that the example given above actually maximizes total consumer value given that every consumer watches the same one commercial.

TABLE III
Total consumer value based on the number and type of advertisements broadcasted. The single stars signify the optimal choice for each consumer separately, while the double stars highlight the optimal advertisement strategy for the TV network without customization.

Advertisement Strategy	C_1	C_2	C_3	Total Consumer Value
No ads	10	6	3	19
1 ad for A **	12*	6	3	21**
1 ad for B	8	8*	2	18
1 ad for C	9	5	6*	20
1 ad for A and 1 ad for B	9	8*	2	19
1 ad for A and 1 ad for C	10	5	1	16
1 ad for B and 1 ad for C	6	7	5	18
1 ad for A, 1 for B, and 1 for C	8	7	5	20
Customized programming	**12**	**8**	**6**	**26**

Now suppose that the TV network has the ability to show different advertisements to different consumers during program *P*. In this case the network can show the commercial for product A to C_1, the commercial for B to C_2,, and the commercial for *C* to C_3. The total realized consumer value in this case will be 26 which is much higher than when the network could not show different advertisements to different consumers. This demonstrates the benefits of well-targeted advertising. Given the information in the tables we can show that there exists a set of prices for each advertising strategy of program *P* that will provide an incentive for each consumer to choose the optimal quantity and type of advertising they wish to view. The price of the program will determine the revenue collected by the network. An example is shown in Table IV.

TABLE IV
An illustrative example of a possible list of prices that provides incentives for consumers to choose the best possible commercials to watch. The stars signify the optimal choice for each consumer. The net value for each consumer is calculated by subtracting the price in the second column of Table IV from the corresponding consumer values in Table III.

Advertisement Strategy	Price of Choice	Net Value to C_1	Net Value to C_2	Net Value to C_3
No ads	6	4	0	-3
1 ad for A	6*	6*	1	-2
1 ad for B	3*	5	5*	-1
1 ad for C	4*	5	1	2*
1 ad for A and 1 ad for B	4	5	4	-2
1 ad for A and 1 ad for C	4.5	5.5	0.5	-3.5
1 ad for B and 1 ad for C	3.5	2.5	3.5	1.5
1 ad for A, 1 for B, and 1 for C	4	4	3	1
Total Network Revenue	**13**	**Net Consumer Value**		**13**

In order to induce optimal self-selection the price vector in Table IV has to reflect the values in Table I and Table II. It seems that consumers are the most likely entity to know their own information from these two tables. We can also imagine that the TV network has some idea about the values in Table I although the network does not know for sure which value corresponds to which consumer. The same will be true for advertisers. They might know on average how effective their commercial might be, so they might know the values in Table II, but they will not know which value corresponds to which consumer. The TV network has to find a way to get some information about the values in Table II from advertisers and then price its programming and advertising services in such a way as to maximize its revenue.

IV. ELICITING VALUE-ADDED INFORMATION FROM ADVERTISERS

One way for the TV network to get information about the effectiveness of different commercials in raising consumer value-added is to have advertisers participate in an auction. One such auction assumes that the consumer will see an interactive screen prior to watching TV. The screen will contain *K* slots, where *K* is determined by the network. Each slot represents one commercial and will contain a product category, a company name, a product description, or even a viewer rating (on product or humor in ad, etc). The interactive process will allow the consumer to choose a subset of those commercials they are willing to view. The number will be between 0 and *K*. The network can let advertisers, bid for *only one* of these slots. The TV network should not use the auction format of Google and Yahoo's auctions because their long-term strategic properties in a variety of situations are still not known [4][13]. The TV network can display the commercial titles in different *random* order to every viewer. The K advertiser's with the highest bids get the slots and are displayed to the consumer, but their bid is not what they are actually charged. The network can then charge the companies, whose commercial is chosen by a viewer, the same price – the value of the $(K+1)^{th}$ highest bid. So the highest non-winning bid determines the actual price paid by an advertiser, if a user selects their ad. Since the amount of the bid that every advertiser submits only decides whether the advertiser wins a slot or not, but does not determine the amount that the advertiser pays, it is a weakly dominant strategy for every advertiser to bid their true average value-added [12]. This presumes that advertisers are equivalent in every other aspect except the efficiency of their advertisement.

V. DESIGNING A PRICING ALGORITHM

A valid pricing algorithm has to be able to tell the TV network what price to charge for its service given all the information available to the network. We will look at an algorithm that finds a best projected subscription price, which is the same for all consumers. As mentioned in the previous section the TV network conducts the initial auctions with the advertisers to determine which commercials will be offered to the viewers. To be more specific, the TV network solicits bids b_i, $i \in [0, 1, ...M]$, from *M* advertisers for the amount of money that each advertiser is willing to pay when a consumer views its commercial. The advertisers with the top *K* bids are then selected. Let b^1 be the highest bid, b^2 the second highest, etc. Suppose that $v_{j,m}$ is the value to consumer j of watching a program mixed with m commercials[3]. The TV network uses the bids from the advertisers' auction to find each consumer's approximate total value for mixing the program with any number and type from the top *K* commercials. The total value to consumer j for seeing the program with up to the first *K* commercials is

$$V_{j,k} = v_{j,k} + \sum_{1=1}^{k} b^i .$$

Thus the TV network can construct a table T similar to Table III in the working example. There are several dif-

[3]Note that the TV network does not know exactly which value corresponds to which consumer. Therefore the j index is used just for convenience because the actual consumer is not known.

ferences between table T and Table III. The TV network does not know which value corresponds to which consumer. Also, not all possible combinations of commercials are considered but just the following: no commercials, the top commercial, the top two commercials, the top three commercials, etc. Given the values in table T, the TV network can discover the subscription fee that maximizes its revenue if the values in table T were the actual consumer values. To accomplish this, the TV network picks the maximum values in every column. This will represent the best approximation of consumers' total values given the information that the TV network has. The TV network can then vary the price from the lowest column max to the highest column max at the bottom of table T and find the price q, which will maximize its revenue. More formally:

1. Start with a price q_m equal to the lowest max of any column in table T
2. Given the values in the table as constructed above, find which options might be chosen by every consumer. More specifically, suppose that X is a matrix containing binary 0 or 1 variables x_{jk}. If the top k commercials are shown to consumer j then x_{jk} is 1, and if the top k commercials are not shown to consumer j then x_{jk} is 0. Our purpose is to find the matrix X that will maximize the expression:

$$\sum_{j=1,k=0}^{J,K} (V_{j,k} - q_m)x_{jk}$$

Subject to the constraint:

$$\sum_{k=0}^{K} x_{jk} \leq 1 \text{ for every } j$$

Let us define the resulting matrix as X^*.

3. Find the revenue given the options that your consumers will choose

$$R_m = \sum_{j,k} q_m x_{j,k}{}^*$$

4. Pick the next highest price q from the column maximums of table T and go back to step 1 until you reach the highest column maximum in the bottom row of table T.
5. Compare all R_m and find the highest projected revenue and the subscription price that generated it or

$R^* = \max R_m$

$q^* = \text{Argmax } R_m$

Let us take the working example from above and find the best projected subscription charge and then the projected and actual revenues from using the pricing algorithm described above. Advertisers A, B, and C will bid 8/3, 5/3, and 7/3 respectively. These are added to the v's to get the total values and build table T (see Table V).

TABLE V

This table shows how table T for the working example in Section III is constructed. The values in this table are calculated by adding the bid(s) of the advertiser(s) whose ad is being shown to the respective consumer and the respective values in Table I. The best projected subscription price is 6 2/3, the projected revenue is 20, and the actual revenue is 13 1/3. This happens because of mismatch with customer C3. Under these prices, customer C3 will decide not to buy any of the offered mixtures since his/her actual value from all combinations will be negative.

Ad Strategy	Consumer total values		
No ads	10*	6	3
1 ad for A	9 2/3	6 2/3	4 2/3
1 ad for A, 1 ad for C	8	7*	6
1 ad for A, 1 ad for C, and 1 ad for B	6 2/3	6 2/3	6 2/3*
Max for each column	**10**	**7**	**6 2/3**

Remember that the TV network does not really know which number matches which consumer. Intermediate rows including B and C, or A and B do not really matter because the correspondence is unclear, and the only thing that the network knows is that generally A is more valuable than C, which is more valuable than B in terms of value-added. That is why the projected revenue cannot be attained in most cases. The TV network still makes more revenue from consumers (13 1/3) than if it does not show any commercials (12). In addition, the network will receive advertising fees from all the advertisers whose commercials have been picked and watched.

The pricing algorithm described above can be extended to achieve price discrimination (charging different prices to different viewers). Instead of searching for the optimal single price that maximizes its revenue, the network can look for a vector of prices, one for each combination of program with commercials, which maximizes its revenue. Under most cases this will result in even higher revenues for the TV network; however, the algorithm will require more steps and will take longer to run.

VI. PLANNING EFFICIENCY

It is desirable to find out under what circumstances the projected revenue calculated by the pricing algorithm proposed above will be the same as the actual revenue collected by the TV network. With a few more simplifying assumptions about values, we will be able to graph the expected deviations from the projected revenue. Let us suppose that the value for the TV program is distributed uniformly on the interval $[0, v_p]$. If we have a very large number of consumers, these values can be represented by a straight line in a consumer demand chart. This is the dotted line in Figure I. Suppose further that all consumers are uniform in terms of the decrease in value for the program that they experience by mixing the TV program with commercials. We can find the total average value V from showing the first K commercials by adding the winning K advertisers' bids to the value of the TV program net of the decrease in value from

interruptions. The result is summarized by the thin line in Figure I, and q^* will be the price resulting from the above mentioned algorithm.

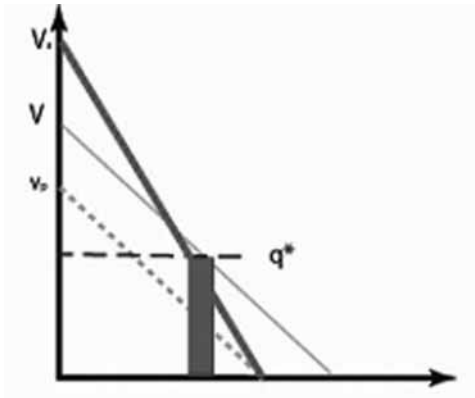

FIGURE I
The shaded area shows the difference between projected and actual revenue when consumers with higher value for P also have higher value-added for product commercials, The x axis represents number of consumers.

Remember that the bids only represent consumer averages. The actual total value Va will coincide with V only if there is no correlation between the distribution of the values for the TV program and the distributions of the positive value-adding effects of the commercials for different products. If, however, there is statistical correlation between these variables we would expect that V and V_a will be different. For example, if consumers, who place high value on the TV program, also have a higher value-added from seeing the commercials, the slope of the Va line will be higher (see the thick line in Figure I). The revenue-maximizing price then should be higher than q^*. The shaded area represents the approximate difference between actual and projected revenue. In this case the actual revenue will be lower than projected. If we have the opposite correlation, then the actual revenue will be higher than projected. In any case the pricing algorithm will always generate higher revenue than when consumers are not allowed to pick commercials.

VII. LIMITATIONS

The algorithm shown above is the simplest one to help TV networks decide how much to charge for their advertising and programming services if they decide to allow consumers to choose which commercials they would like to watch and advertisers to bid for slots on the TV screen from which consumers can choose. There are still many issues that need to be explored, and there is much room for improvement. Many commercials might have an entertainment value that is not directly related to the product or service being advertised. In that case, even if advertisers' bids are honest, they do not reflect the actual benefit that consumers get from a commercial. This will result in possible revenues being lost by the TV network when it is using the pricing algorithm described above.

We assumed for simplicity that commercials have the same length. If the lengths are different than this might be a factor that needs to be taken into consideration when discovering the optimal prices. The order of commercials might also have an impact on the viewers value-added. The pricing mechanism above assumes that they are absent. An auction, in which viewers are asked to submit bids on different combinations of commercials and programming, can provide a solution to many of these problems; however, this will require that prices are determined in real time and broadcasted over the network, which vastly complicates the problem. The advertising method described above also does not account for ways to introduce consumers to new products and/or new companies. In addition, some malicious behavior is possible in the sense that an advertiser might constantly be choosing to watch a commercial of its competitor, so that the competitor has to pay for the viewing even though this has not resulted in an increase in the value-added. The TV network has to develop some strategies to counteract similar intentions. All these limitations can be addressed in future research projects.

VIII. CONCLUSION

If consumers are already familiar with advertised companies or products, they should be allowed to pick the number and type of commercials that they would like to watch. This paper describes an auction that TV networks can use to sell slots to advertisers combined with an off-line pricing algorithm that TV networks can use to calculate a subscription fee. The proposed changes in the advertising process can increase the efficiency of advertising. At the same time, they can increase TV network revenues and consumer satisfaction. There is much potential for further research to address some of the mentioned concerns.

REFERENCES

[1] Bellamy, R. & Walker, J. Television and the Remote Control: Grazing on a Vast Wasteland, The Guilford Press, New Yor, NY 1996

[2] Butters, G. "Equilibrium Distributions of Prices and Advertising" Review of Economic Studies 44, pg. 465-93, 1967

[3] Davis, R and Yung, D. "Understanding the Interactivity between Television and Mobile Commerce" Communications of the ACM, v48 n7,July 2005, pg. 104

[4] Edelman, B, Ostrovsky, M. & Schwartz, M. "Internet Advertising and the Generalized Second Price Auction: Selling Billons of Dollars Worth of Keywords" Research Paper Series, RP 1917, Graduate school of Business, Stanford University, October 2005

[5] Forker, D. and Ward, R. Commodity Advertising: The Economics and Measurement of Generic Programs, New York, USA, 1993

[6] Furht, B, Kalra, D., Kitson, F.,Rodriguez, A, Wall, W. "Interactive Television Systems" IEEE Computer, May 1995, pg. 25

[7] Galbraith, J. The New Industrial State Boston, Houghton Mifflin, 1967

[8] Hansell, S. "Your Ads Here (All of Them): Google Wants to Dominate Madison Avenue, Too" New York Times, October 2005, sec 2, pg1

[9] Stout, P. and Burda, P. "Zipped Commercials: Are They Effective?" Journal of Advertising v18 n4, pg. 23-32, 1989
[10] Stross, R. "Someone Has to Pay for TV.But Who? And How?" New York Times, May 7, 2006 pg.3.3
[11] TNS Media Intelligence "TNS Media Intelligence Reports U.S. Advertising Expenditures Increased 3.0 Percent in 2005", February 27, 2006 http://www.tns-global.com accessed May 9, 2006
[12] Vickrey, W. "Counterspeculation, Auctions, and Competitive Sealed Tenders" Journal of Finance, 16, March 1961, pg. 8-37
[13] Vragov, R. "On-line Search Engine Advertising Auctions" working paper, Baruch College, CUNY, New York, April, 2006
[14] Zhang, L., Chung, J., Liu, L., Lipscomb, J., Zhou, Q. "An Integrated Live Interactive Content Insertion System for Digital TV Commerce" Proceedings of IEEE 4th International Symposium on Multimedia Software Engineering, 2002

Roumen Vragov *received his PhD in Economic Systems Design from the University of Arizona. He is currently an Assistant Professor of Computer Information Systems at Baruch College, CUNY. His current research interests involve applying electronic auction mechanisms to solve a variety of allocation and optimization problems.*

Ilan Levine *received his PhD from Baruch College, CUNY. He is currently an Assistant Professor of Computer Information Systems at Mount Olive College. His current research interests are innovative uses of electronic markets and e-commerce.*

Welcome Aboard for the New BTS Members

The IEEE Broadcast Technology Society would like to welcome the following new members for 2007. We hope that this membership will be valuable in your careers.

Australia
Adelmo Amaro
Mark Hall
Steve Hamblin
Vasavan Mahesan
Gregory Mar
Sakari Mattila
Michael Reznik
Adrian Whichello

Belguim
Alberto Gomezgil
Philippe Latour

Bosnia and Herzegovina
Igor Babic

Brazil
Leonardo Chaves
Vaderez Donzelli
Gustavo Lima
Ricardo Ramos
Luis Raunheitte
Lamartine Vilar De Souza
Fujio Yamada
Marcelo Zuffo

Bulgaria
Desislava Mihailova

Canada
Wing-Chi Chow
Etienne Frenette
Fadhel Ghannouchi
Xuan Jin
Sam Leitch
Doron Levy
Kenny Lewis
Wei Li
Ali Mohamed Ahmed
Arnold Ness
Haresh Thevathasan
Demin Wang
Liang Zhang

China
Bo Ai
Ming Chen
Xia Chen
Shipeng Li
Xi Peng
Niu Yanchao

Columbia
Kevin Barragan Higuera

Croatia
Zoran Blazevic
Ivan Marinovic

Denmark
Harald Fuchs
Barrington Stewart

Equador
Manuel Cumba
Angel Vacacela

Egypt
Tamer Abd Elfattah
Finland
Imed Bouazizi

France
Christopher Bernard
Sacha Vrazic

Germany
Sven Dortmunf
Jose Gonzalez Garrido
Joachim Jenne
Oliver Lietz
Susan Matinfar

Greece
Nicholas Ioannidis
Konstantina Karamintziou
Michael Mytilineos
Nikos Toumanidis

Honduras
Carlos Giovanny

Hong Kong
Wai Ng
Wing Chuen

India
Pravin Chopade
Ravishankar Ganesan
Athisha Govindan
Sangita Kale
Joydex Lahiri
Deepak Malhotra
Muthureddy Manimozhi
George Matthew
M Meena
Suganya N
Mala patil
John Paul Iyyanam
Jimmy Puthenparampil
Sriram Sethuraman
Malini Thangarajan R
Rengaraja Thankanadar
Naresh Tuteja

Iran
Bahman Dolarshahi
Ehsan Motazedi

Ireland
David Denieffe
Andy Green
Tom Hurley
Santanu Mazumdar
Hugh Melvin
Donal Moran
A Murphy
Abedelhamid Nafaa

Israel
Shamir Aharon
Avichai Cohen
Noam Eshkoli
Ori Krantz
Baruch Swartz
Roni Ziv

Italy
Stefano Bianconi
Roland Burger
Mario Giovanni
Luigi Frecassetti
Nicolo Michelusi
Dario Pennisi
Vincenzo Scoppa
Beatrice Tomasi

Japan
Tomoki Hoda
Y Karasawa
Hiroki Sugawara
Teruhiko Suzuki

Kenya
Samuel Mutisya

Korea(South)
Yongjun Chang
Myeongje Jeon
Munchurl Kim
Bunshik Lee
Dongho Lee
Su Won Lee
Sangyoun Rho
Young-Woo Suh
Jin Joo Yoon

Malaysia
Zhao Ming

Mexico
Adrian Gonzalez
Raquel Maldonado
Alejandro Perez-Flores
Manuel Alejandro Rios Ceron

Morocco
Mouna Es-Saadi
Laila Naji

New Zealand
Stephen Fogerty

Nigeria
Babafemi Ogunmade

Pakistan
Nasir Mahmood
Sarah Saeed Qazi

Peru
Eder Aguilar Gonzales

Poland
Pawel Meissner

Qatar
Youchaa Bissani
Aline El Helou

Romania
Iulian Nicolae udroiu

Russia
Alexander Bogush
Dmitriy Morozov
Eugene Popov
Vladimir Zhurovich

Saudi Arabia
Osama Abumansoor
Abdullah Al Darrab
Mohammed Al-Saiari
Gerard Baraclan

Serbia and Montenegro
Vladimir Petrovic
Darko Pokorni
Zeljko Tekic

Slovakia
Kemal Alic
Jan Hlubik

Spain
Jesus Garcia Perez

Sudan
Maual Mustafa

Sweden
Obamwonyi Enofe
Hans Kohlin

Switerland
Matteo Butussi

Taiwan
Shihyu Chang
Chiu Hsin
Mao-Ching Chiu
Chie Dou
Chih-Hung Kuo
Jenn-kaie
Chih-Peng Li
Chin-Feng Lin
Hsiao-Feng Lu
Jyh-Horng Wen

Turkey
Baki Onur
Cirus Jahanzad

United Arab Emirates
Sajikumar Nair

United Kingdom
Katrine Finstad
Paul Fowler-Harman
Adrian Graham
Jethro Harris
Richard Hodgson
Justin Mitchell
Giusppina Moffa
Oussalah Mourad
Colin Raeburn
Hamid Shirazi
David Taylor
Emmanuel Tsekleves

USA
Robert Ablah
Kelly Adams
Candance Arnold
David Axtell
Brian Batovsky
Dejuan Bishop
Frank Blanda
Craig Beile
Colby Bourgeois
Dave Brooking
William Bryant
Andrew Burnheimer
Robert Burns
Mary Burns
Jamie Calderon
Bryan Cardwell
Lianchuan Chen
Henry Cianci
John Covington
Roland Cox
Rachel Cruz
Daniel Cuddihy
Jeff Depolo
Anthony Destephen
James Dilts
Michael Doty
Eric Eagle
Bishop Ellison
Lance Evans
Geoffrey Everett
Scott Fischel
Darrell Fletcher
Nick Flor
Bruce Franca
Thomas Furnas
John George, Jr
Gregory Gilmore
John Gray
Walter Hall
Robert Hampton
Mark Harris
Jacob Hawley
Richard Hedrick
Carrie Hernandez
A Hunter
Ramy Ibrahim
Paul Ingram
Swapna Iyre
Stephen Jensen
Norman Johnson
Jean Ledoux Kamnang
George Kang
Bijan Kankashour
Marion Kovach
Samant Kulmar
Bill Lawrence
John lee
Gregory Lesko
Thomas Lewis
Charles Lewis II
Brian Litinsky
Dennis Lloyd
Arun Mantani
Stephen Martin
David Mcgehee
Dane Mcgraw
Michael Mehigan
William Merritt
Robert Meuser
Derek Meyer
Brian Miklas
Christopher Miller
Dhawal Moghe
Vijay Mohan
Daniel Montero
Tom Motoyama
Louis Mueller
Barry Muldrey
Peter Nysen
Bing Ouyang
Zacchaeus Oyinloye
Garry Paxinos
Stefan Petrat
Emil Provasek
Ralph Quaresima
Ismaila Rafiu
Roy Reese
Leonard Reynolds
Pedro Rivera Torres
Mitchell Robinson
Luis Rosado
John Rowe
Arindam Saha
Jonathan Schmidt
Dave Schnuelle
James Seaman
Tiefeng Shi
Steven Silva
Dave Siracusa
Steve Sluz
Michael Sly
Albert Stem
Daniel Stoica
Fengwen Sun
Darwin Tolbert
Chirag Trivedi
Joe Tymecki
Venkatram Vajhula
Sanjay Vishin
Biller Waller
Sam Wallington
Jack Wenzinger
Scott Whitcomb
Edward Williams
Same Wismer
Jerry Yogboh
Demitrious Young
Min Zhang
David Zufall

Venezuela
Giovanny Lugo
Ekundayo Palmer
Luis Santana

Vietnam
Arturo Vasquez C

SAVE THE DATE!!

BTS Broadband Multimedia Symposium

2008 IEEE International Symposium on Broadband Multimedia Systems and Broadcasting

"Multiple Technologies for Multimedia"

March 31 – April 2, 2008
Las Vegas, Nevada USA

Co-located with CTIA WIRELESS 2008
and IEEE WCNC 2008

IEEE Broadband Multimedia 2008 is the third annual edition of this industry-oriented premier forum for the presentation and exchange of technical advances in the rapidly converging areas of multimedia broadcasting, telecommunications, consumer electronics, and networking technologies. Leading engineers, researchers, and service providers from around the world will convene again to present and discuss state-of-the-art research results and challenges in the application and implementation of broadband multimedia systems – both wireline and wireless. This year, potential session topics will include IPTV standardization issues, and various broadcast-overlay, cellular, and broadband wireless technologies – such as DVB-H, FLO, ATSC-M/H, DMB, 3G/4G, MBMS, and WiMAX.

Potential topics:

- **Multimedia systems & services:** Mobile TV • IPTV • Internet TV • DTV • Datacasting • Non-real-time services • Interactive systems • Content management • Field trials & test results • Service deployments • Standards • Broadcast-overlay/cellular/wireless broadband networks
- **Transmission & networking:** Channel modeling & simulation • Channel coding • Modulation & multiplexing • Signal processing for transmission • Propagation & coverage • Congestion/ capacity management • Traffic & performance monitoring • Handoff issues • Networking & QoS
- **Multimedia processing:** Audio technology • Video coding • Video processing • Quality assessment & QoE • Content protection & watermarking • Content adaptation & scaling • Error resilience & concealment • Rate control • Retrieval & indexing • 3-D & multi-view video
- **Multimedia devices:** Acquisition technology • Display technology • Set-top boxes, DVRs & home networking • Mobile, portable & handheld devices • Program guides & navigation

IEEE Broadcast Technology Society
www.ieee.org/bts

445 Hoes Lane
Piscataway, NJ 08854 USA
Phone: +1 732 562 3906
Fax: +1 732 981 1769

IEEE Broadcast Technology Society Organization

IEEE Broadcast Technology Society Administrative Committee

Society Officers

President: William T. Hayes
Vice-President: William Meintel
Treasurer: E. Lanny Nass
Secretary: Thomas Silliman
Senior Past President: Garrison C. Cavell
Junior Past President: Thomas M. Gurley

Administrative Committee Members-at-Large (elected by membership for 3 year term)

2005-2007	2006-2008	2007-2009
Dave Bancroft	James Fang	Gregory L. Best
Richard Friedel	Sid Shumate	Guy Bouchard
Brett Jenkins	Michael Simon	Charles W. Einolf, Jr.
William Meintel	Jonathan Edwards	Ralph H. Justus
Dmitry A. Tkachenko	Pablo Angueira	Thomas B. Silliman

Standing Committees and Representatives

Advanced Television Systems Committee (ATSC)
Yiyan Wu

Awards and Nominations
Sid Shumate

Broadband Multimedia Symposium Co-Chairs
Tom Gurley
Brett Jenkins

Broadcast Symposium Chair
Guy Bouchard

BroadcastAsia Representative
Yiyan Wu

Committee on Man and Radiation (COMAR)
Jules Cohen

Committee on Communications and Information Policy (CCIP)
Richard Biby

Education Chair
Ralph R. Hogan Jr.

History Committee
E. Noel Luddy, Chair
James E. O'Neal

IBC Representative
Michael Bennett

PACE
Theodore J. Kuligowski

Parliamentarian
Ralph H. Justus

Membership Chair
Michael Bennett

Newsletter Editor
William Meintel

Publications Chair
Charles W. Einolf Jr.

Publicity
Kerry Cozad

Standards
Greg Best

Strategic Planning
Eric R. Wandel P.E.
Brett Jenkins
Jon Edwards

Technical Activities
Edmund A. Williams
James Fang

United States Telecommunications Training Institute (USTTI)
Gerald Berman

IEEE Transactions on Broadcasting Editor-in-Chief
Yiyan Wu

Angueira, Pablo
Bilbao Engineering College
Alda. Urkijo S/N. 48013 Bilbao, Spain
jtpanbup@bi.ehu.es

Bancroft, David
Old Boundary House
The Warren
Caversham, UK
Reading, RG4 7th
dave.bancroft@thomson.net

Berman, Gerald A.
11430 Strand Dr.
Apt. #4
North Bethesda, MD 20852
tel: 301 881 3224
g.a.berman@ieee.org

Best, Greg
Greg Best Consulting, Inc.
9223 N. Manning Ave.
Kansas City, MO 64157
tel: 816 792 2913
gbconsulting@kc.rr.com

Bennett, Michael
mikebennett@supanet.com

Biby, Richard, P.E.
Richard P. Biby, P.E.
PO Box 364
Waterford, VA 20197
Tel: 540 882 4290
rich@biby.net

Bouchard, Guy
CBC Radio
1400 Boul. Rene-Levesque E.
Montreal, Canada H2L 2M2
tel: 514 597 3863
fax: 514 597 3838
guy_bouchard@radio-canada.ca

Cavell, Garrison
Cavell,Mertz & Davis
7839 Ashton Ave.
Manassas, VA 20109
tel: 703 392 9090
gcavell@cmdconsulting.com

Cohen, Jules
Consulting Engineer
3330 N. Leisure World Blvd #828
Silver Spring, MD 20906-5653
tel: 301 598 5774
jules.cohen@ieee.org

Cozad, Kerry
P.O. Box 949
22 Tower Rd.
Raymond, ME 04071
tel: 207 655 8133
kerry.cozad@dielectric.spx.com

Edwards, Jonathan
Dutreil, Lundin & Rackley
201 Fletcher Ave
Sarasota, FL 34237-6019
Jon@dlr.com

Einolf, Charles
3007 Argentina Place
Mitchellville, MD 20716
c.einolf@ieee.org

Fang, James
12 Spaulding St. #3
Wakefield, MA 01880
(908)419-7104 cell
james.fang@ieee.org

Friedel, Richard
FOX Broadcasting
10201 W. Pico Blvd
Los Angeles, CA 90064
tel: 310 369 6655
richardfr@fox.com

Gurley, Thomas M.
229 Old Colony Way
Rocky Mount, NC 27804
tgurley@ieee.org

Hayes, William T.
PO Box 244
Johnston, IA 50131-0244
Hayes@iptv.org

Hogan, Ralph R.
1004 S. Blaine St
Moscow, ID 83843-3806
r.hogan@wsu.edu

Jenkins, Brett
Thomson Corporation
104 Feeding Hills Rd.
Southwick, MA 01077
brett.jenkins@us.thales-bm.com

Justus. Ralph
5405 Cromwell Drive
Bethesda, MD 20816
tel: 301 367 5774
rjustus@ustelecom.org

Kim, Seung Won
Kook Wha Dong Sung Apt 105-202
Seo-Gu Sam Cheon Dong
Taejon, Korea 302-782
swkimm@etri.re.kr

Kuligowski, Theodore J.
t.kuligowski@ieee.org

Luddy, E. Noel
11121 Hurdle Hill Dr.
Potamic, MD 20854
tel: 301 299 2270
luddyen@aol.com

Meintel, William
Meintel, Sgrignoli & Wallace
Warrentown, VA 20188
540-428-2308
wmeintel@computer.org

Nass, E. Lanny
CBS Corp.
Suite 350, 2175 K St. NW
Washington, DC 20037
tel: 202 457 4602
elnass@cbs.com

O'Neal, James E.
4104 Javins Dr
Alexandria, VA 22310
crm114j@verision.net

Shumate, Sidney
BIA Financial Network
15120 Enterprise Ct.
Ste 100
Chantilly, VA 20151
tel: (703) 802 2964

Silliman, Thomas
Electronics Research, Inc.
7777 Gardner Rd.
Chandler, IN 47610
tel: 812 925 6000
tom@eriinc.com

Simon, Michael
Rohde & Schwarz, Inc.
8661-A Robert Fulton Dr.
Columbia, MD 21046
tel: 410 910 7834
Mike.simon@rsa.rhode-schwarz.com

Tkachenko, Dmitry
St.Petersburg State Polytechnic
Polytechnicheskaya 29
St.Petersburg, Russia 195251
tel: +7 812 554 2982
dtkach@mail.wplus.net

Wandel, Eric R., P.E.
Research Associates of Syracuse
7444 Timber View Drive
Newburgh, IN 47630
Tel: 812 490-7947
ericwandel@sigecom.net

Williams, Edmund A.
ed.williams@ieee.org

Wu, Yiyan
Communications Research Ctr.
3701 Carling Ave.,
P.O. Box 11490
Station H, Ottawa, Ontario
Canada K2H 8S2
tel: 613 998 2870
yiyan.wu@crc.ca

Society Administrator
Kathy Colabaugh
IEEE Technical Activities
445 Hoes Ln.
Piscataway, NJ 08854
tel: 732 563 3906
bts@ieee.org

Publications Administrator
TBD
IEEE Technical Activities
445 Hoes Ln.
Piscataway, NJ 08854
tel: 732 562 3905
bt-pubs@ieee.org

MARK YOUR CALENDAR!

IEEE Broadcast Technology Society

Presents the

IEEE 57th Annual Broadcast Symposium

31 October – 2 November 2007
Hotel Washington, Washington D.C. USA

Sessions

Using Broadcast DTV Signals for Mobile Applications
Broadcast Digital Television Transmission
Broadcast Digital Radio Transmission
Digital Cable and IPTV Applications

Registration

Registration information and program are at: http://www.ieee.org/bts

Institute of Electrical and Electronics Engineers, Inc.
445 Hoes Lane
P.O. Box 1331
Piscataway, NJ 08855-1331